Pushing Performance
Since 1945

DIN-Signal R5ROW160MP-5,0CAU30-2



Image is for illustration purposes only. Please refer to product description.

Part number	02 41 160 4201 015
Specification	DIN-Signal R5ROW160MP-5,0CAU30-2
HARTING eCatalogue	https://harting.com/02411604201015

Identification

Category	Connectors
Series	DIN 41612
Identification	Type R extended
Element	Male connector
Description of the contact	Straight

Version

Termination method	Press-in termination
Connection type	PCB to cable
Number of contacts	160
Contact configuration	Rows a, b, c, d and e, positions 1, 2, ... , 31, 32
Termination length	5 mm
Coding	Coding with loss of contacts
PCB fixing	With fixing flange

Technical characteristics

Contact rows	5
Contact spacing (termination side)	2.54 mm
Contact spacing (mating side)	2.54 mm
Rated current	1 A
Rated current	Rated current measured at 20 °C, see derating curve for details
Clearance distance	≥1.2 mm
Creepage distance	≥1.2 mm

HARTING Electronics GmbH | Marienwerderstraße 3 | 32339 Espelkamp | Germany
Phone +49 5772 47-97200 | electronics@HARTING.com | www.HARTING.com

Pushing Performance
Since 1945

Technical characteristics

Insulation resistance	$>10^{12}$ Ω
Contact resistance	≤15 mΩ
Limiting temperature	-40 ... +105 °C upper limiting temperature limited by the pcb
Insertion force	≤160 N
Withdrawal force	≤120 N
Performance level	AU 30 1 acc. to IEC 60603-2
Mating cycles	≥500
Test voltage $U_{r.m.s.}$	1 kV
Isolation group	IIIa (175 ≤ CTI < 400)
PCB thickness	≥1.6 mm
Hot plugging	No

Material properties

Material (insert)	Thermoplastic resin, glass-fibre filled
Colour (insert)	RAL 7032 (pebble grey)
Material (contacts)	Copper alloy
Surface (contacts)	Au over Ni Mating side Sn over Ni Termination side
Layer thickness	≥0.76 µm
Layer thickness	≥30 µinch
Material flammability class acc. to UL 94	V-0
RoHS	compliant
ELV status	compliant
China RoHS	e
REACH Annex XVII substances	Not contained
REACH ANNEX XIV substances	Not contained
REACH SVHC substances	Not contained
California Proposition 65 substances	Not contained
Fire protection on railway vehicles	EN 45545-2 (2020-08)
Requirement set with Hazard Levels	R26

Specifications and approvals

Specifications	IEC 60603-2 (complementary)

HARTING Electronics GmbH | Marienwerderstraße 3 | 32339 Espelkamp | Germany
Phone +49 5772 47-97200 | electronics@HARTING.com | www.HARTING.com

Pushing Performance
Since 1945

Specifications and approvals

Railway classification	F4/I3 acc. to NFF 16-101/102

Commercial data

Packaging size	20
Net weight	22.37 g
Country of origin	China
European customs tariff number	85366990
GTIN	5713140197268
eCl@ss	27460201 PCB connector (board connector)
ETIM	EC002637
UNSPSC 24.0	39121415

Current carrying capacity

The current carrying capacity of the connectors is limited by the thermal load capability of the contact element material including the connections and the insulating parts. The derating curve is therefore valid for currents which flow constantly (non-intermittent) through each contact element of the connector evenly, without exceeding the allowed maximum temperature.
Measuring and testing techniques acc. to IEC 60512-5-2

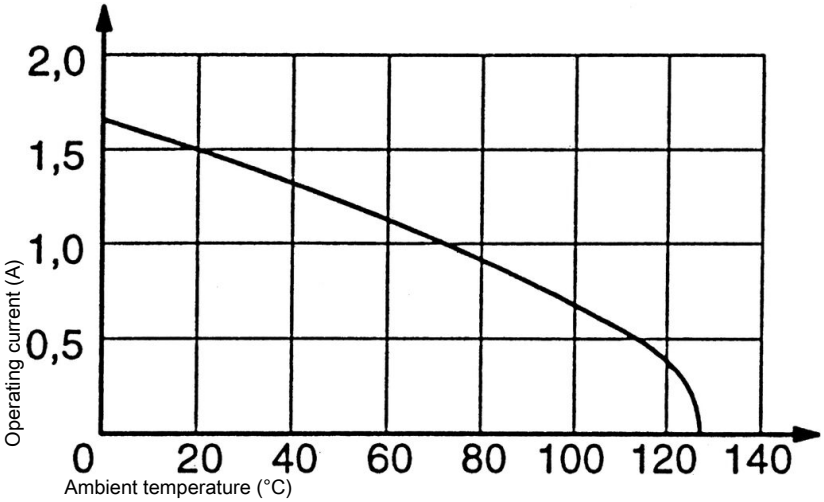

Coding with loss of contacts
To avoid cross-plugging of adjacent connectors a coding system is required.
The coding is achieved by means of a code pin which is inserted into the selected chamber of the female connector (the contact cavity must be filled with a female contact!).
The opposite male contact must be removed with the help of the specially designed tool. It’s recommended to use a number of code pins in relation to the total number of contacts per connector: 3 pins for 64 contacts, 7 pins for 160 contacts
Coding pin 09 02 000 9901
Removal tool for male contacts 09 99 000 0133

HARTING Electronics GmbH | Marienwerderstraße 3 | 32339 Espelkamp | Germany
Phone +49 5772 47-97200 | electronics@HARTING.com | www.HARTING.com

Pushing Performance
Since 1945

Recommended configuration of plated through holes

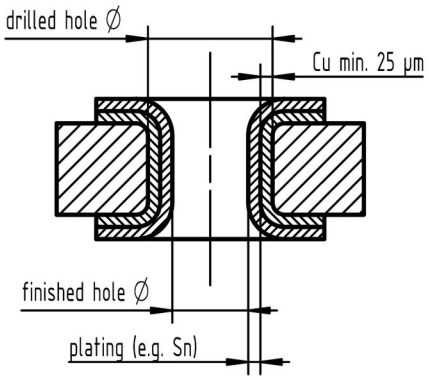

Tin plated PCB (HAL) acc. to EN 60352-5	Drilled hole Ø	1,15±0,025 mm
	Sn	max. 15 µm
	plated hole Ø	0,94 – 1,09 mm
Chemical tin plated PCB	Drilled hole Ø	1,15±0,025 mm
	Sn	min. 0,8µm
	plated hole Ø	1,00 – 1,10 mm
Gold /Nickel plated PCB	Drilled hole Ø	1,15±0,025 mm
	Ni	3 – 7 µm
	Au	0,05 – 0,12 µm
	plated hole Ø	1,00 – 1,10 mm
Silver plated PCB	Drilled hole Ø	1,15±0,025 mm
	Ag	0,1 – 0,3 µm
	plated hole Ø	1,00 – 1,10 mm
Copper plated PCB (OSP)	Drilled hole Ø	1,15±0,025 mm
	plated hole Ø	1,00 – 1,10 mm

In addition to the hot-air-level (HAL) other pcb surfaces are getting more important. Due to their different properties, such as mechanical strength and coefficient of friction we recommend the above mentioned configuration of pcb through holes.

Assembly instructions

It is highly recommended to use HARTING press-in tools to ensure a reliable press-in process. Please refer to the catalogue for tools, machines and further information for the press-in process.

Mating conditions

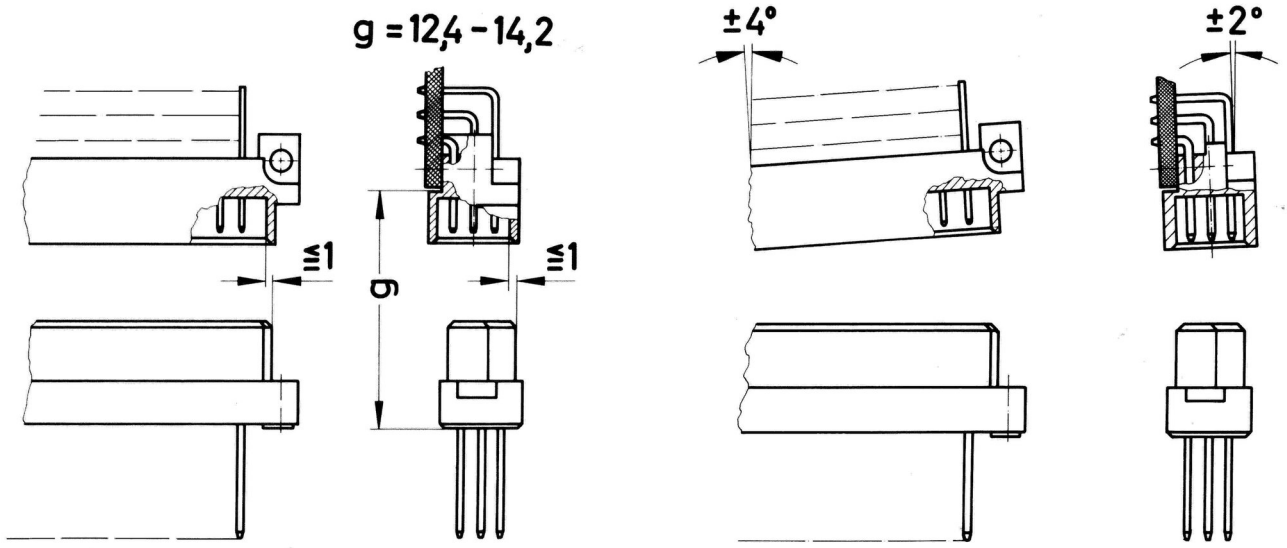

To ensure reliable connections and prevent unnecessary damage, please refer to the application data diagrams.
These recommendations are set out in IEC 60603-2.
The connectors should not be coupled and decoupled under electrical load.

HARTING Electronics GmbH | Marienwerderstraße 3 | 32339 Espelkamp | Germany
Phone +49 5772 47-97200 | electronics@HARTING.com | www.HARTING.com