DIMENSIONS:	
A	4.500" ±0.063
B	5.250" ±0.125
C	3.750" ±0.063
D	3.750" ±0.063
E	3.500" ±0.063
F	4.062" ±0.063
G	0.203" X 0.375" ±0.015

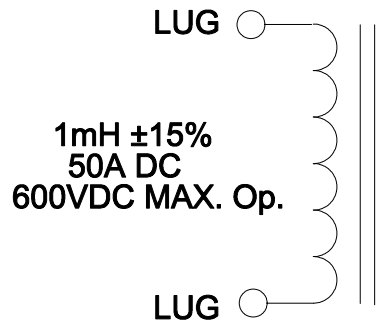

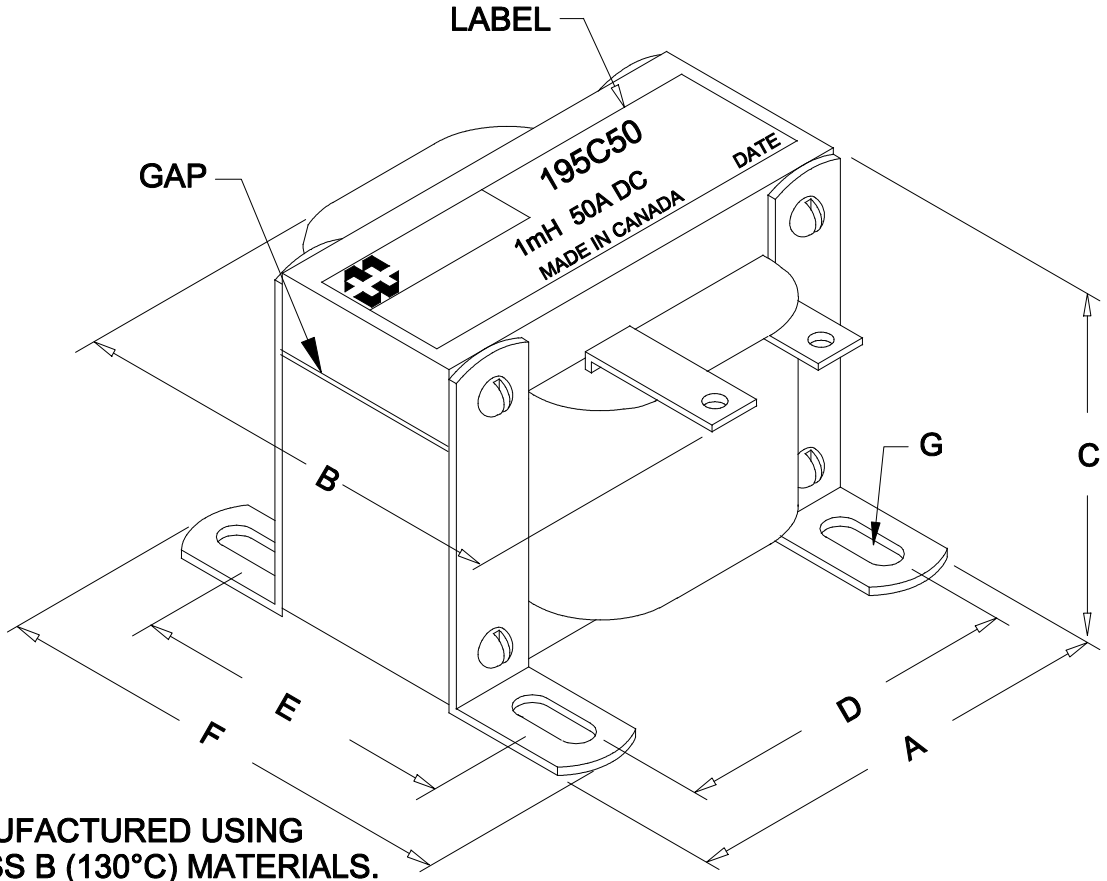

MANUFACTURED USING
CLASS B (130°C) MATERIALS.
RoHS COMPLIANT
OPERATING TEMP.:
-40°C TO 105°C
STORAGE TEMP.:
-40°C TO 85°C

ELECTRICAL DATA:

TESTS	CONDITIONS	ACCEPTANCE CRITERIA
INDUCTANCE	@ 5V, 60Hz, 50A DC, LUG - LUG	1mH ±15%
DCR	@ 20°C, LUG - LUG =	0.0056Ω ±15%
HIPOT	PRIMARY - CORE	2500V, 60Hz, 1 SEC

HAMMOND MANUFACTURING T.M.
ELECTRONIC DIVISION
52 RANKIN PLACE,
WATERLOO, ONTARIO, N2J 3Z5
PH # (519) 886-6181
FAX # (519) 886-9540

TITLE: CHOKE

NO	DATE	REVISION	DWG. BY
0	03/15/16	RELEASED. C.I.	CORINA ILIE
			DATE
			03/15/16
			DIM IN(X)MM( )

195C50