194D

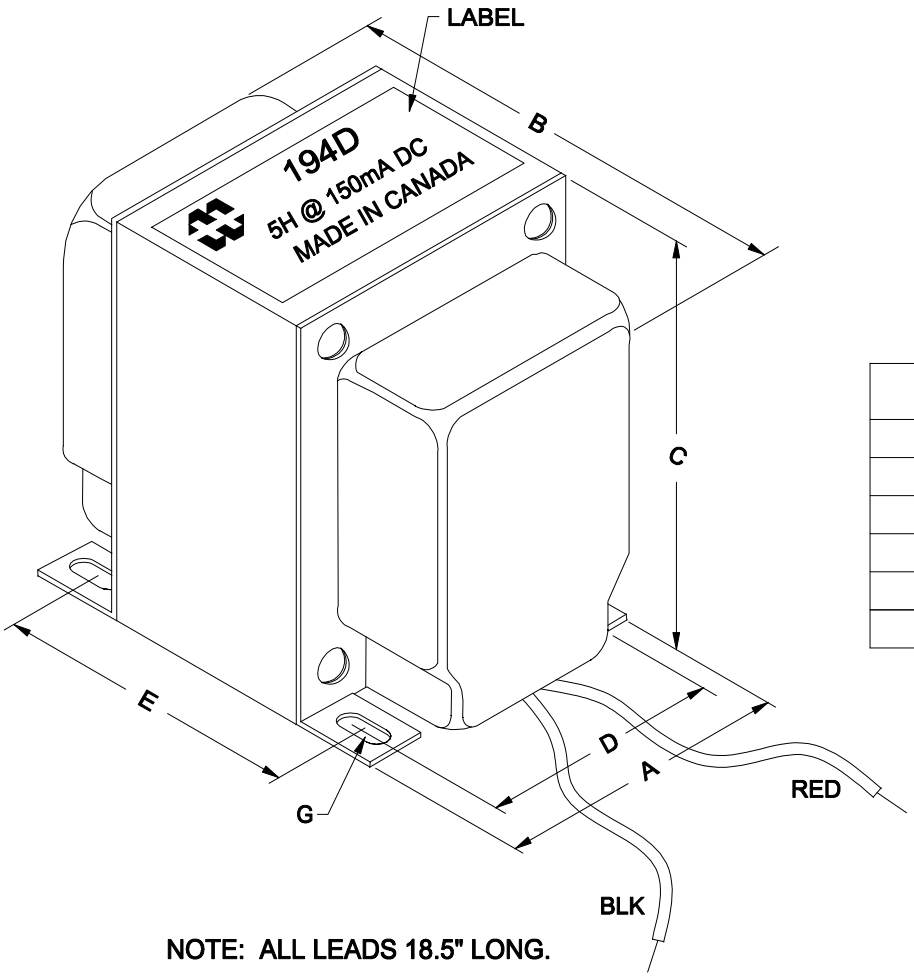

NOTE: ALL LEADS 18.5" LONG.

DIMENSIONS:	
A	2.188" ±0.063
B	2.447" ±0.125
C	2.625" ±0.063
D	1.750" ±0.063
E	1.438" ±0.063
G	0.188" x 0.325" ±0.015

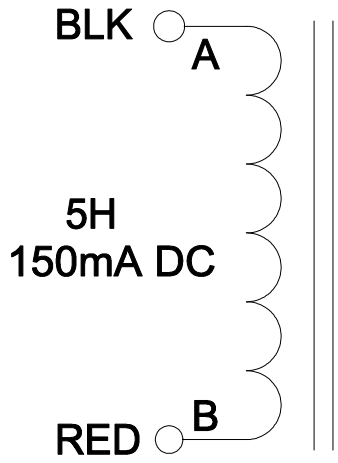

ELECTRICAL DATA:	
DCR	@ 20C, BLK - RED =107.2 Ω ±15%
Pri. Inductance	5H @ 150mA DC

HAMMOND ELECTRONICS
52 RANKIN PLACE,
WATERLOO, ONTARIO, N2L 3Z5.
PHONE (519) 886-6181
FAX # (519) 886-9540

TITLE

CHOKE OR REACTOR TRANSFORMER

NO	DATE	REVISION	DR BY / DATE
			DR BY IOAN POP
0	05/12/09	PRELIMINARY. I.P.	DATE 05/12/09
			DIM IN(X)MM( )

194D