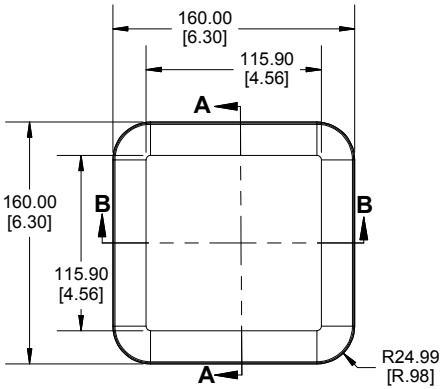

TOP VIEW

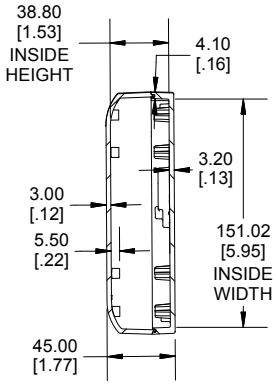

SECTION A-A
END VIEW

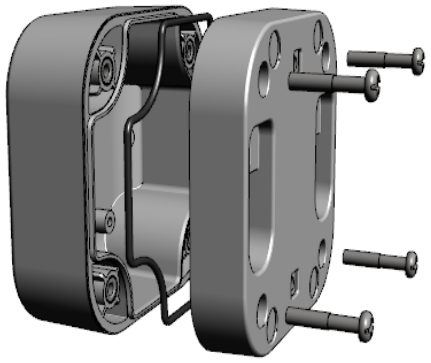

POLYCARBONATE
VERSION ONLY
c UL US LISTED
FILE #E65324
TYPE 4,4X,6,6P

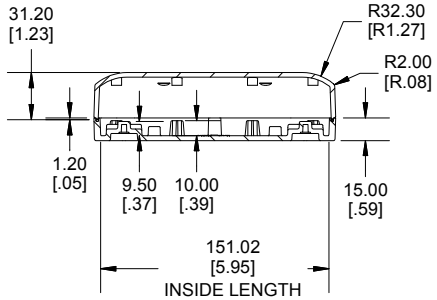

SECTION B-B
SIDE VIEW

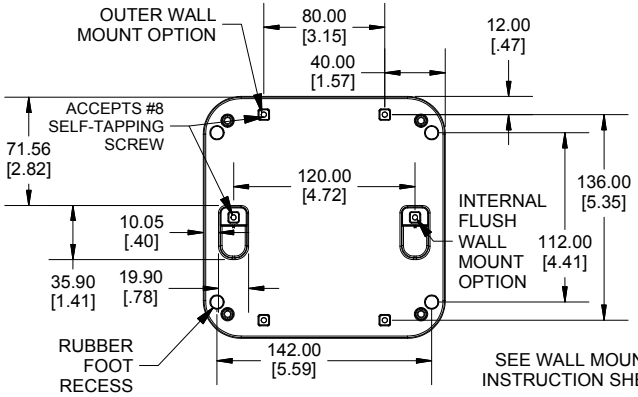

WALL MOUNT FOOT VIEW

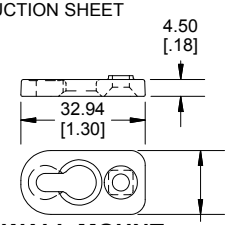

WALL MOUNT
FOOT

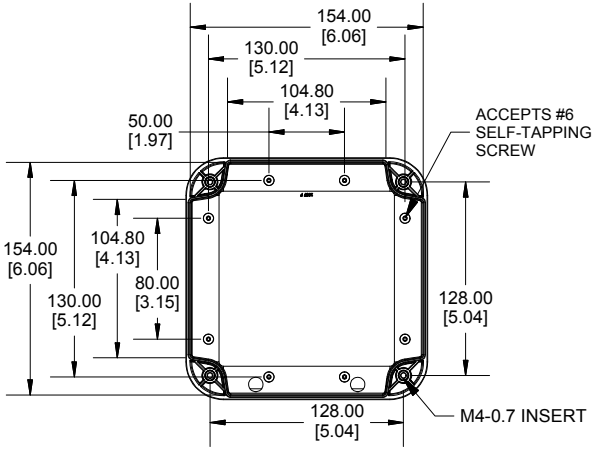

INSIDE LID

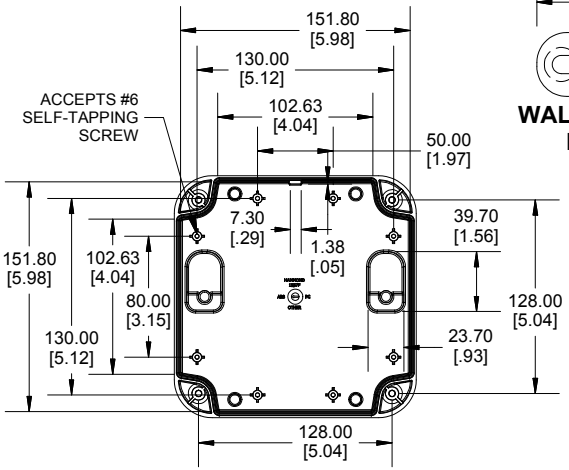

INSIDE BOX

Enclosures can be Factory Modified (Milling, Drilling, Printing etc.)
Contact Factory (modshop@hammondmfg.com) for quotes
Solid models of this enclosure available in .stp or .x_t.
(Part number and text placement/orientation on our products are subject to change, we do not recommend using them as a locating reference for modification purposes)

NOTE
Purchased assembly includes box, lid, 4 cover screws, preformed silicone gasket, 4 rubber feet, 4 wall mount foot screws, and 4 wall mount feet. General Purpose ABS version is not UL approved. (Matl UL94 - HB) Polycarbonate version is UL 508A approved. (Matl UL94 - 5VA @ 3mm)
Recommended Cover Screw Torque - 71-85 ozf-in (50-60 cN-m)

1557		
1557F Enclosure		
General Purpose ABS Black Enclosure		1557FBK
General Purpose ABS Grey Enclosure		1557FGY
Polycarbonate Black Enclosure		1557F2BK
Polycarbonate Grey Enclosure		1557F2GY
ACCESSORIES		
Silicone Pre-formed Gasket Black (Pkg 2)		1557FGASKET
Clear Rubber Feet (Pkg 24)		1421T6CL
Stainless Steel Cover Screws [M4-0.7 X 20mm] (Pkg 50)		SC576-50
Steel P.C.Board Screw [#6 X 1/4" Self Tapping] (Pkg 50)		SC526-50
Stainless Steel Wall Mount foot Screw [#8 X 3/8" Self Tapping] (Pkg 50)		SC556-50
Wall Mout Foot Kit [wall mount foot] (Pkg 24) [#8 X 3/8" Self Tapping] (Pkg 24)	General Purpose ABS Grey	1557FOOTGY-24
	General Purpose ABS Black	1557FOOTBK-24
	POLYCARBONATE Grey	1557FOOT2GY-24
	POLYCARBONATE Black	1557FOOT2BK-24

Dimensions:
mm
[inches]

HAMMOND MANUFACTURING®

1557F

www.hammondmfg.com