Data sheet Product MK 202 86 G

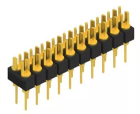

PCB connectors>Male headers

Solder and plug pins, Ø 0.5 mm Also available as single contact, SK ...

Features

pitch:	**2.54 x 2.54 mm**
no. of contacts:	**86**
contact material:	**CuZn-alloy**
surface of contact:	**gold-plated**
surface contact / contact sleeve:	• **Ni+≥0.2µm Au** • **Ni+4...6µm Sn**
version:	**with soldering fork**
shock resistance:	**50 g**
volume resistance:	**≤10 mΩ**
vibration resistance max.:	**15 g**
capacity between two adjacent contacts:	**≤0,4 pF**
nominal current:	**1.5 A**
nominal voltage:	**60 V DC**
test voltage:	**1000 V**
insulating body material:	**PA 4.6. GF**
temperature range:	• **-40°C... +163°C** • **(260°C/10 s)**
class of inflammability:	**UL 94 V-0**
specific insulation resistance:	**$>10^7$ Ω·m**
connection type:	**THT (Einlöt)**

reflow solderable:	**yes**

Technical Drawing

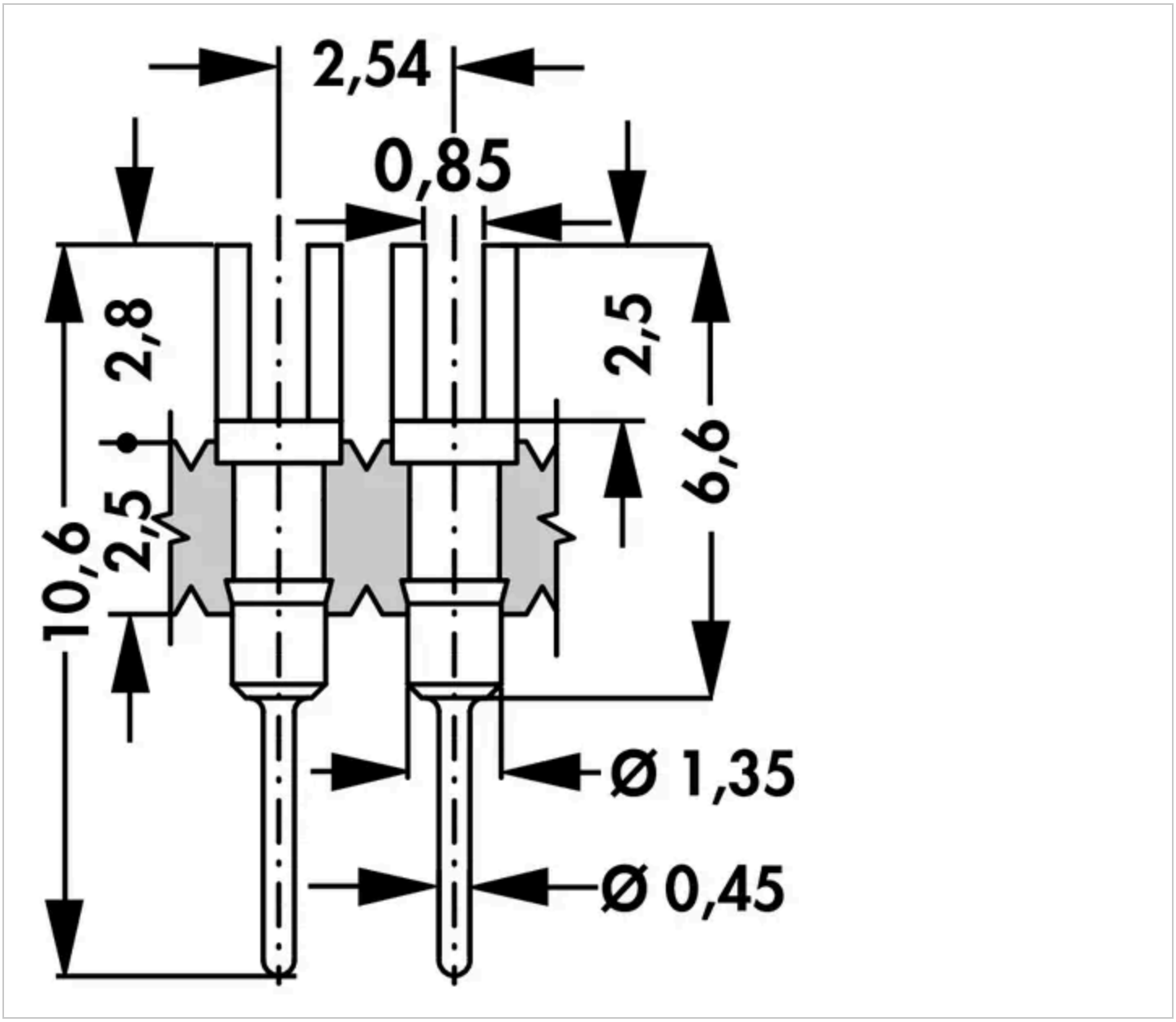

Fischer Elektronik GmbH & Co. KG
DEUTSCHLAND • GERMANY • ALLEMAGNE
Nottebohmstraße 28
58511 Lüdenscheid
Telefon +49 2351 435-0
Telefax +49 2351 45754
info@fischerelektronik.de
www.fischerelektronik.de