# Data sheet Product MK 08 12 Z



PCB connectors>Male headers

Wire wrap pin, square 0,635 mm

**Features**

| | |
|---|---|
| pitch: | **2.54 mm** |
| no. of contacts: | **12** |
| contact material: | **CuZn-alloy** |
| surface of contact: | **tin-plated** |
| surface contact / contact sleeve: | • **Ni+≥0.2µm Au**<br>• **Ni+4...6µm Sn** |
| version: | **with soldering fork** |
| shock resistance: | **50 g** |
| volume resistance: | **≤10 mΩ** |
| vibration resistance max.: | **15 g** |
| capacity between two adjacent contacts: | **≤0,4 pF** |
| nominal current: | **1.5 A** |
| nominal voltage: | **60 V DC** |
| test voltage: | **1000 V** |
| insulating body material: | **PA 4.6. GF** |
| temperature range: | • **-40°C... +163°C**<br>• **(260°C/10 s)** |
| class of inflammability: | **UL 94 V-0** |
| specific insulation resistance: | **$>10^7$ Ω·m** |
| connection type: | **THT (Einlöt)** |

| | |
|---|---|
| reflow solderable: | **yes** |

**Technical Drawing**

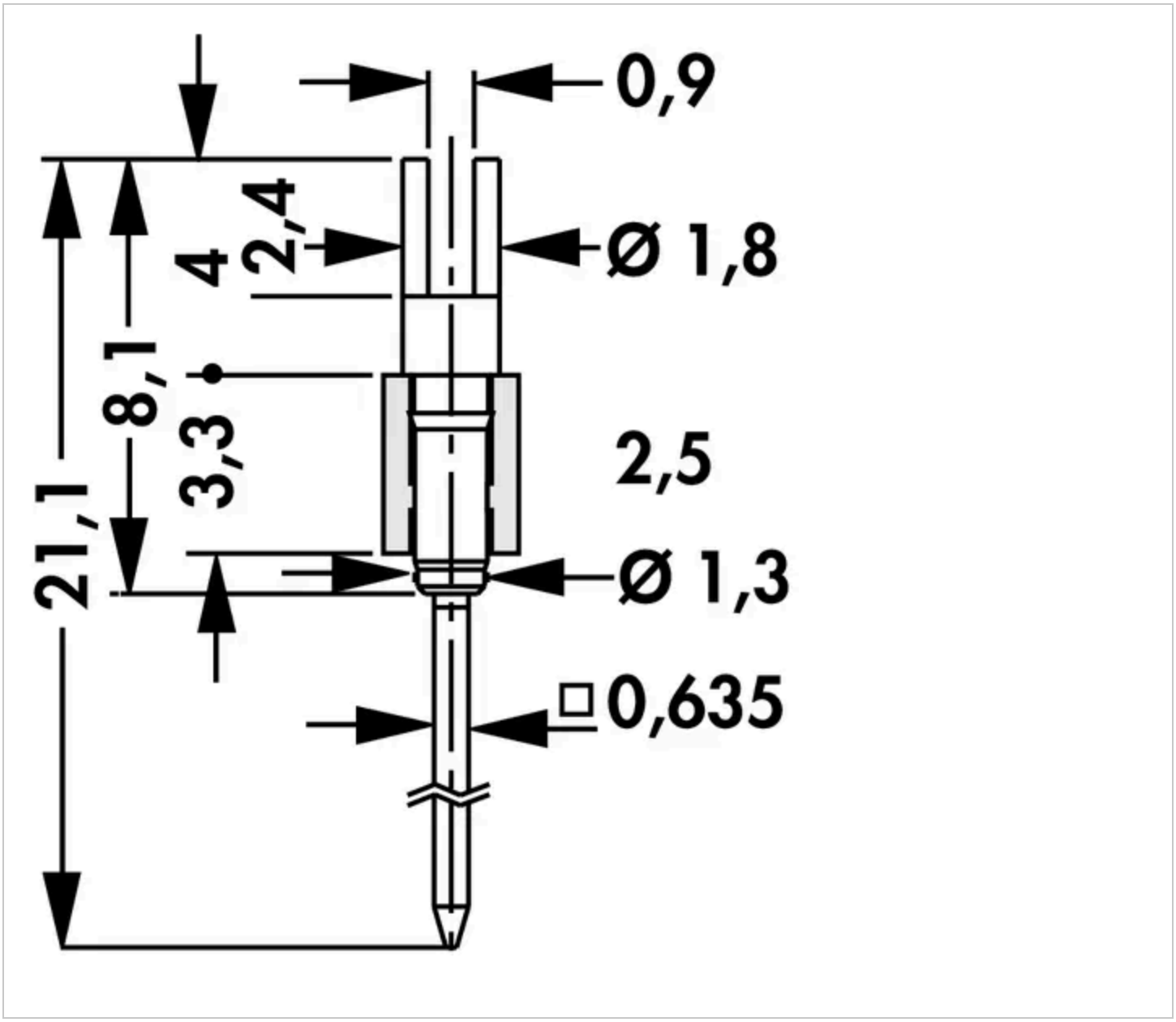


**Fischer Elektronik GmbH & Co. KG**
DEUTSCHLAND • GERMANY • ALLEMAGNE
Nottebohmstraße 28
58511 Lüdenscheid
Telefon +49 2351 435-0
Telefax +49 2351 45754
info@fischerelektronik.de
www.fischerelektronik.de