Data sheet Product KO H 14



Cases > Combination cases

Features

length	100 / 120 / 160 / 200 / 220 / 234 mm
C	
surface	• black anodised • natural colour anodised • case profile SA, cover panels ME • transparent passivated

Technical Drawing

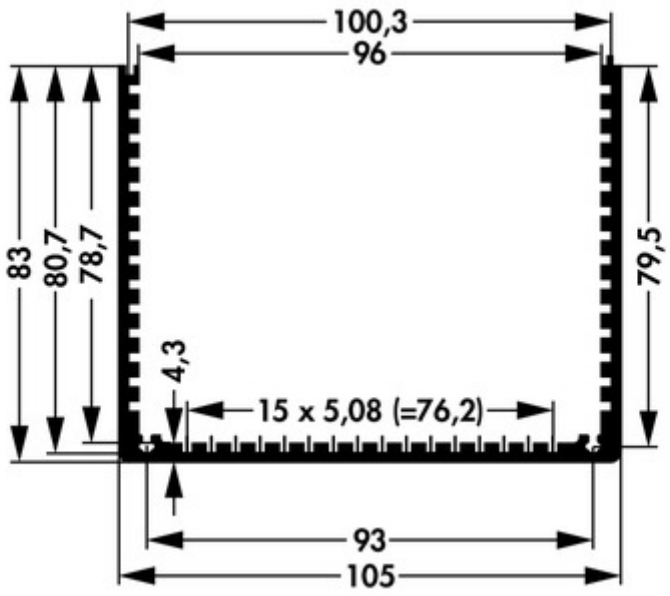

height A [mm]	83
width B [mm]	105
D [mm]	100.3

Further Information

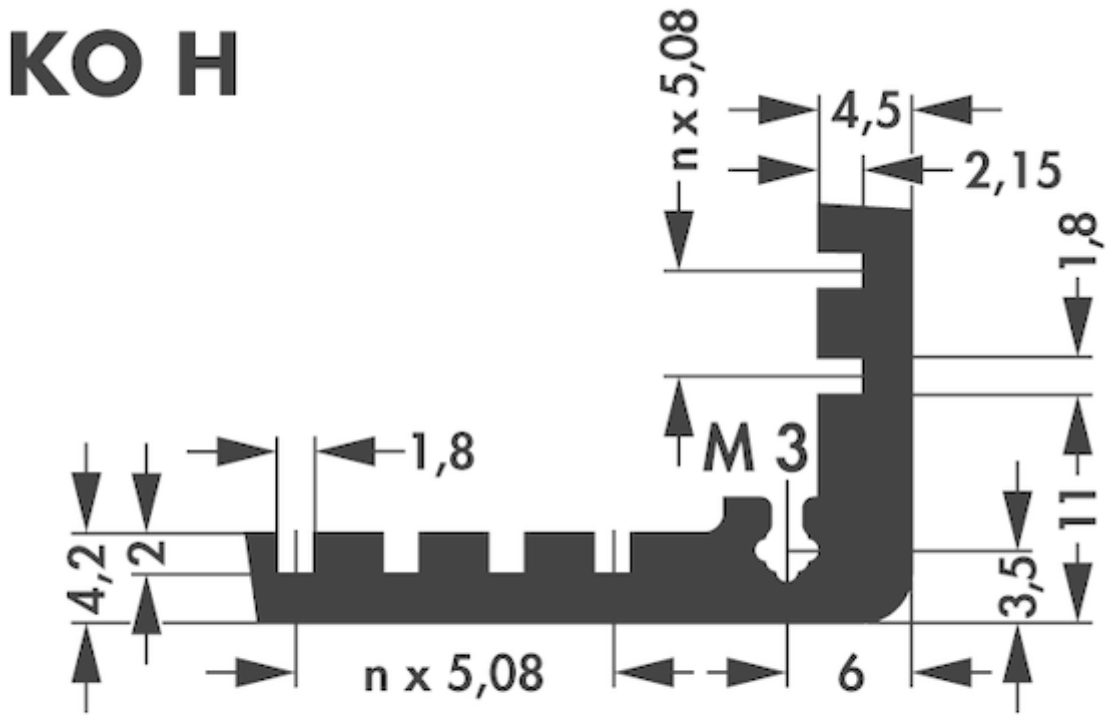

Fischer Elektronik GmbH & Co. KG
DEUTSCHLAND • GERMANY • ALLEMAGNE
Nottebohmstraße 28
58511 Lüdenscheid
Telefon +49 2351 435-0
Telefax +49 2351 45754
info@fischerelektronik.de
www.fischerelektronik.de