PISA 4119

Shielded

New

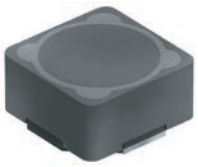

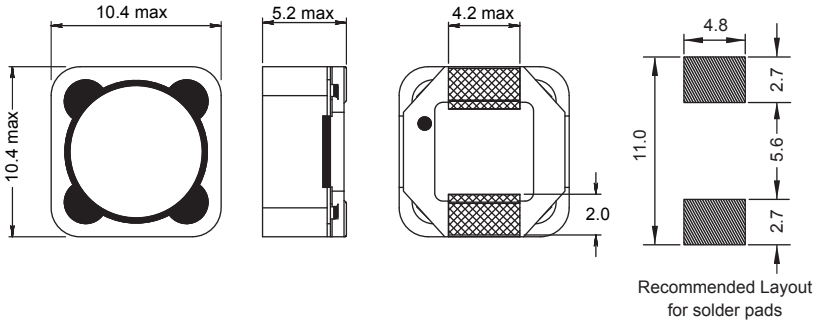

Typical Ls vs Frequency (f)

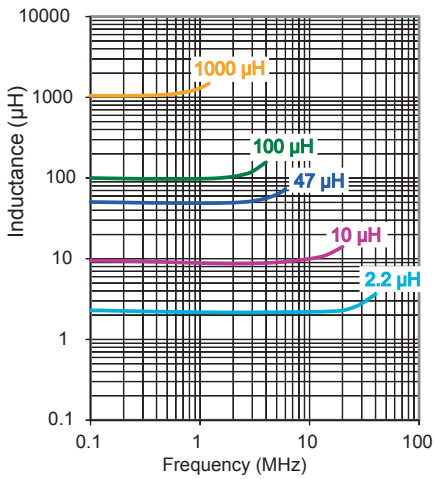

Typical Ls vs Current (I)

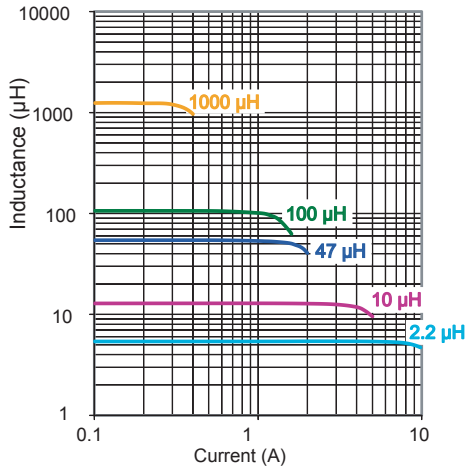

Part No	Inductance L (µH)	f_L (kHz)	Tol ± (%)	DCR max (Ω)	Rated DC Current (A) I_{sat}	I_R
PISA4119-1R0N-04	1	100/0.1V	30	0.007	10 .0	8.80
PISA4119-1R5N-04	1.5	100/0.1V	30	0.010	8.50	7.52
PISA4119-2R2M-04	2.2	100/0.1V	20	0.010	7.20	7.20
PISA4119-4R7M-04	4.7	100/0.1V	20	0.016	4.87	5.50
PISA4119-6R8M-04	6.8	100/0.1V	20	0.022	3.87	4.85
PISA4119-100M-04	10	100/0.1V	20	0.034	3.23	4.20
PISA4119-150M-04	15	100/0.1V	20	0.040	2.60	3.20
PISA4119-220M-04	22	100/0.1V	20	0.067	2.10	2.80
PISA4119-330M-04	33	100/0.1V	20	0.100	1.70	2.35
PISA4119-470M-04	47	100/0.1V	20	0.142	1.36	1.65
PISA4119-680M-04	68	100/0.1V	20	0.180	1.18	1.60
PISA4119-101M-04	100	100/0.1V	20	0.275	0.96	1.30
PISA4119-121M-04	120	100/0.1V	20	0.340	0.84	1.06
PISA4119-151M-04	150	100/0.1V	20	0.450	0.74	1.00
PISA4119-221M-04	220	100/0.1V	20	0.583	0.66	0.80
PISA4119-331M-04	330	100/0.1V	20	0.820	0.56	0.70
PISA4119-471M-04	470	100/0.1V	20	1.370	0.45	0.55
PISA4119-681M-04	680	100/0.1V	20	1.900	0.37	0.50
PISA4119-102M-04	1000	100/0.1V	20	2.800	0.33	0.40

Revision date : 07 Mar 2018

Core Material : Ferrite, magnetically shielded, plastic moulded base.

SPQ : Taped / Reel 600 [-04]

Remarks : - I_{sat} & I_R - see description in Inductors Technical Data.

SMD Power Inductors

● All dimensions in mm