Article datasheet

Insulated Standoff PA-Brass M/F Ø9.5x50 | F=M5x10 M=M5x10

Article-No.: 005.49.550



Image may be similar

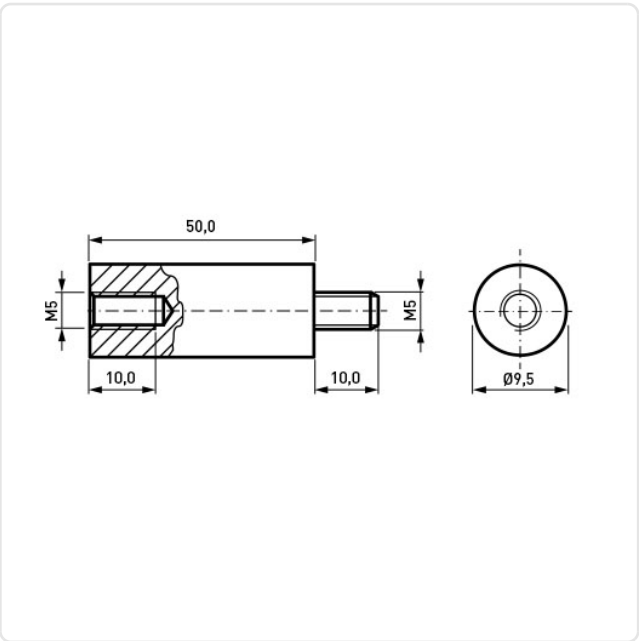

AF / OD [mm]:	9.5
Female Thread Length [mm]:	10
Female Thread Size:	M5
Flammability Class:	UL94-HB
Length [mm]:	50
Male Thread Length [mm]:	10
Male Thread Size:	M5
Material:	PA 6.6
Material Group:	Plastic
Profile:	Round
Thread Insert Material:	Brass
Weight:	7.84g
Conformities:	Reach COMPLIANT, RoHS COMPLIANT, SVHC NOT COMPLIANT

You can find all information on the web on our article detail page
Insulated Standoff PA-Brass M/F Ø9.5x50 | F=M5x10 M=M5x10

Would you like individual advice?
We look forward to your email to products@ettinger.de.

Subject to change and errors.

ETTINGER GmbH
Ottostraße 5 | 85649 Hofolding | Deutschland | www.ettinger.de | info@ettinger.de | + 49 8104 66 23 88