ETTINGER
Elektronik-Bauelemente

Article datasheet

Contact Washer Ø3.2/6.0 x 0.6 White Galv. Spring Steel

Article-No.: 003.20.031

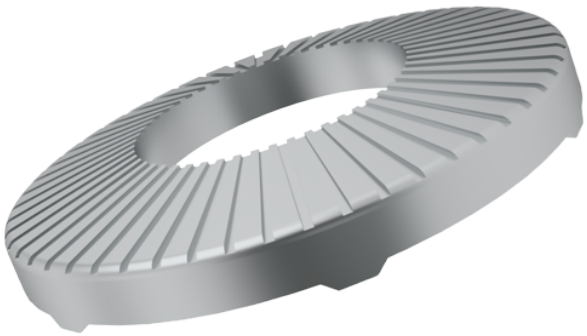

Image may be similar

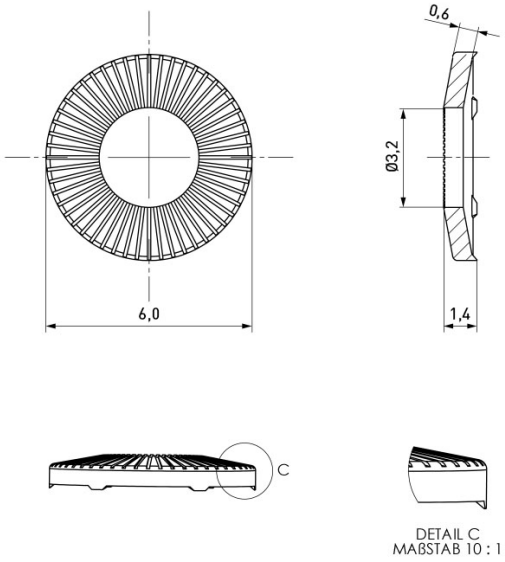

Finish:	Galvanized, White, 15–25 µm
For Thread Size:	M3
Height [mm]:	0.6
Inner Diameter [mm]:	3.2
Material:	Spring Steel
Material Group:	Steel
Outer Diameter [mm]:	6
Weight:	0.09g
Conformities:	Reach COMPLIANT, RoHS COMPLIANT, SVHC COMPLIANT

You can find all information on the web on our article detail page

Would you like individual advice?
We look forward to your email to products@ettinger.de.

Subject to change and errors.

ETTINGER GmbH

Ottostraße 5 | 85649 Hofolding | Deutschland | www.ettinger.de | info@ettinger.de | + 49 8104 66 23 88