ESP32-C6-DevKitM-1

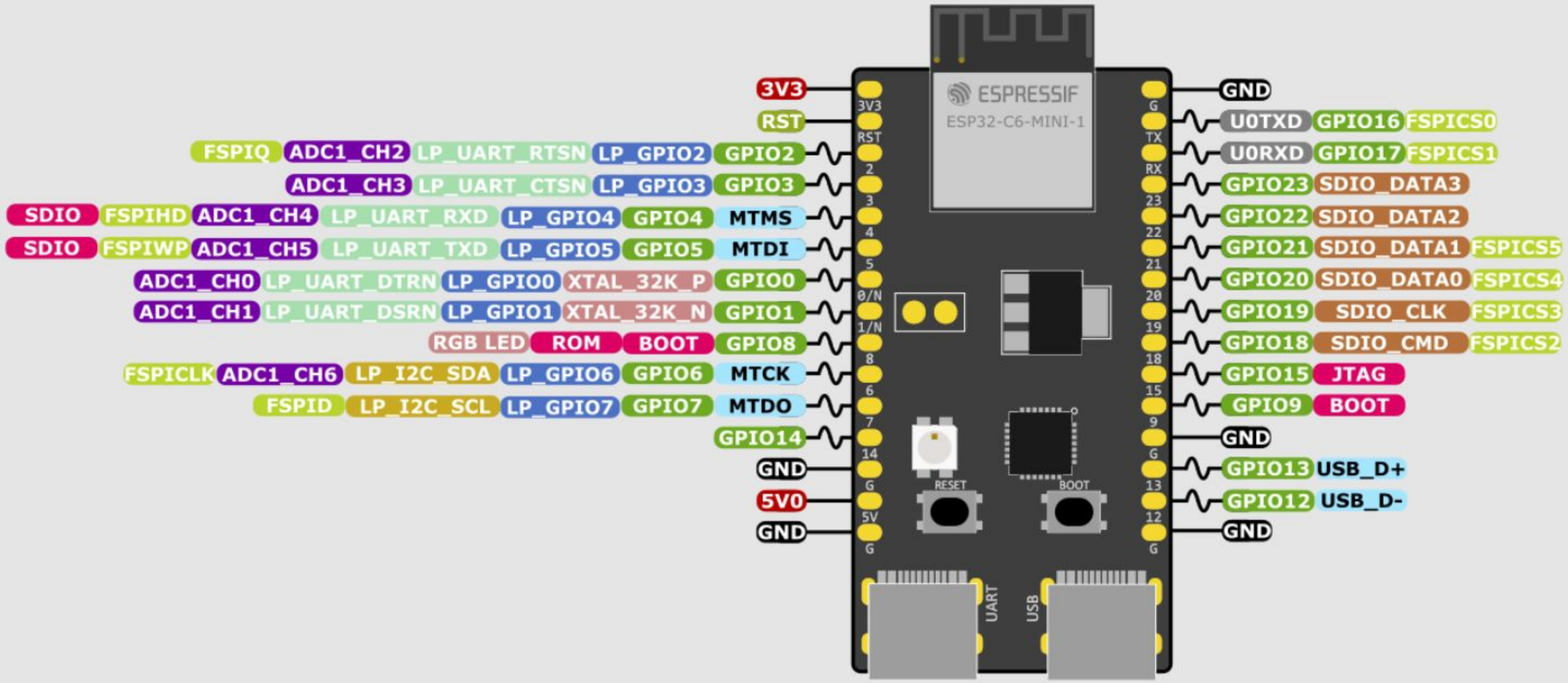

ESP32-C6 Specs

32-bit RISC-V single-core @160 MHz
Wi-Fi IEEE 802.11 ax 2.4 GHz + Bluetooth LE 5 + IEEE 802.15.4 (Zigbee and Thread)
512 KB SRAM (21 KB for cache)
320 KB ROM
30 or 22 GPIOs, 3x SPI, 2x UART, 1x I2C, RMT
LED PWM 6ch, 1x 12-bit ADC with 7ch, TWAI®
USB Serial/JTAG, ETM, MCPWM, SDIO Slave

PWM Capable Pin
Fast SPI Functions
General Purpose Input /Output
Low-Power UART Functions
Low-Power I2C Functions
SDIO Functions
Other Related Functions
Strapping Pin Functions
JTAG for Debugging and/or USB
Analog-to-Digital Converter
Serial for Debug/Programming
Ground Plane
Power Rails (3V3 and 5V)
Low-Power GPIO Functions