Product Note
EA-OEM-011 & EA-OEM-511

The Art of Embedded Systems Development – **made Easy™**

To Our Valued Customers,

This note affects a specific revision of the LPC4357 OEM board (product number: EA-OEM-011). The board is also sold as part of the LPC4357 Developer's Kit (product number: EA-OEM-511).

Identification

The affected revision of the LPC4357 OEM board is identified on the backside of the board, see picture below.

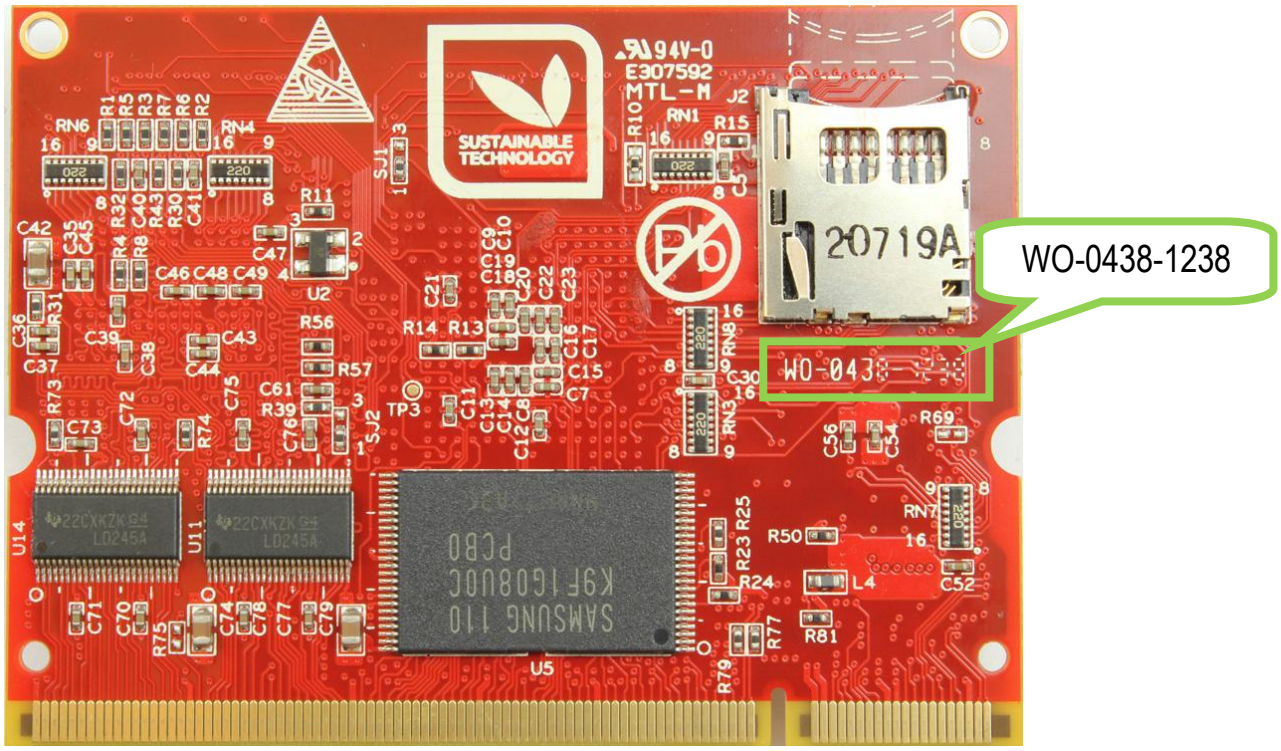

Boards marked with "WO-0438-1238" are affected. These are boards called "LPC4357 OEM board rev A1". This text is also printed on the top side of the board.
Boards that do not have this exact marking are not affected.

Embedded Artists AB
Södra Promenaden 51
SE-211 38 Malmö
Sweden

Phone/Fax: +46 (0)40-611 00 93
E-mail: info@embeddedartists.com
http://www.embeddedartists.com

© Copyright 2010 Embedded Artists AB. All rights reserved. All other products or service names mentioned herein are trademarks of their respective holders and should be treated as such.

Privacy policy: http://www.embeddedartists.com/privacy.php
Legal: http://www.embeddedartists.com/legal.php

Note about CLK2_OUT signal

Signal CLK2_OUT (pin CLK2 on the LPC4357) is available at SODIMM pad/pin 115 on the LPC4357 OEM board. When the external SDRAM (on the LPC4357 OEM board) is used, signal CLK2_OUT cannot be used for anything. It is an SDRAM clock signal and any distortion on the signal will affect SDRAM operation.

Signal CLK2_OUT can only be used as a general clock signal if the external SDRAM is not used/activated. If external SDRAM is not used on the LPC4357 OEM board then there are no limitations on the core clock frequency of the LPC4357. It can run at up to 204 MHz.

On the OEM base board (on which the LPC4358 OEM board is mounted) SODIMM pad/pin 115 is connected to signal GPIO68_I2S-MCLK, which is routed a long distance over the base board. This will distort the CLK2_OUT signal seen by the LPC4357 and, as a result, limit the core clock operating frequency when the external SDRAM is used. The problem limits the frequencies to 96/96MHz (core/emc frequency) and 144/72MHz. By following the solutions outlined below full operating speed can be achieved, which means 102/102MHz and 204/102MHz operation.

Solution

There are a couple of different hardware solutions depending on how the CLK2_OUT signal is used.

1. If the LPC4357 OEM board is mounted on a custom designed baseboard and the CLK2_OUT signal (SODIMM pin 115) **is not** used and no track is connected to it, then there nothing has to be done. The SDRAM can run at 102/102MHz and 204/102 MHz.

2. If the LPC4357 OEM board is mounted on a custom designed baseboard and the CLK2_OUT signal **is** used then connect a 56 ohm (termination) resistor to ground as close to SODIMM pin 115 as possible. The signal is available on J4, pin 10 on the OEM base board. In most cases this solution will work but the margins for 102/102MHz and 204/102 MHz operation is not big. For better margins, see solution 3). Note that this solution will most likely not work when running the core/emc at lower than full frequency (102/102 or 204/102MHz). It will only work when running at full speed.
   For the future, plan to not use the CLK2_OUT signal as an external clock signal. In future revisions of the LPC4357 OEM board the signal will not be available at pin 115. Note that the external SDRAM cannot be used anyways if signal CLK2_OUT is used for other purposes, for example an I2S reference clock.

Embedded Artists AB
Södra Promenaden 51
SE-211 38 Malmö
Sweden

Phone/Fax: +46 (0)40-611 00 93
E-mail: info@embeddedartists.com
http://www.embeddedartists.com

© Copyright 2010 Embedded Artists AB. All rights reserved. All other products or service names mentioned herein are trademarks of their respective holders and should be treated as such.

Privacy policy: http://www.embeddedartists.com/privacy.php
Legal: http://www.embeddedartists.com/legal.php

3. If solution 2) does not work and result in unreliable operation, the solution is to cut the CLK2_OUT signal before it reaches SODIMM pad/pin 115. The pictures below illustrate the operation that is needed. It is a simple cut of one track on the LPC4357 OEM board.

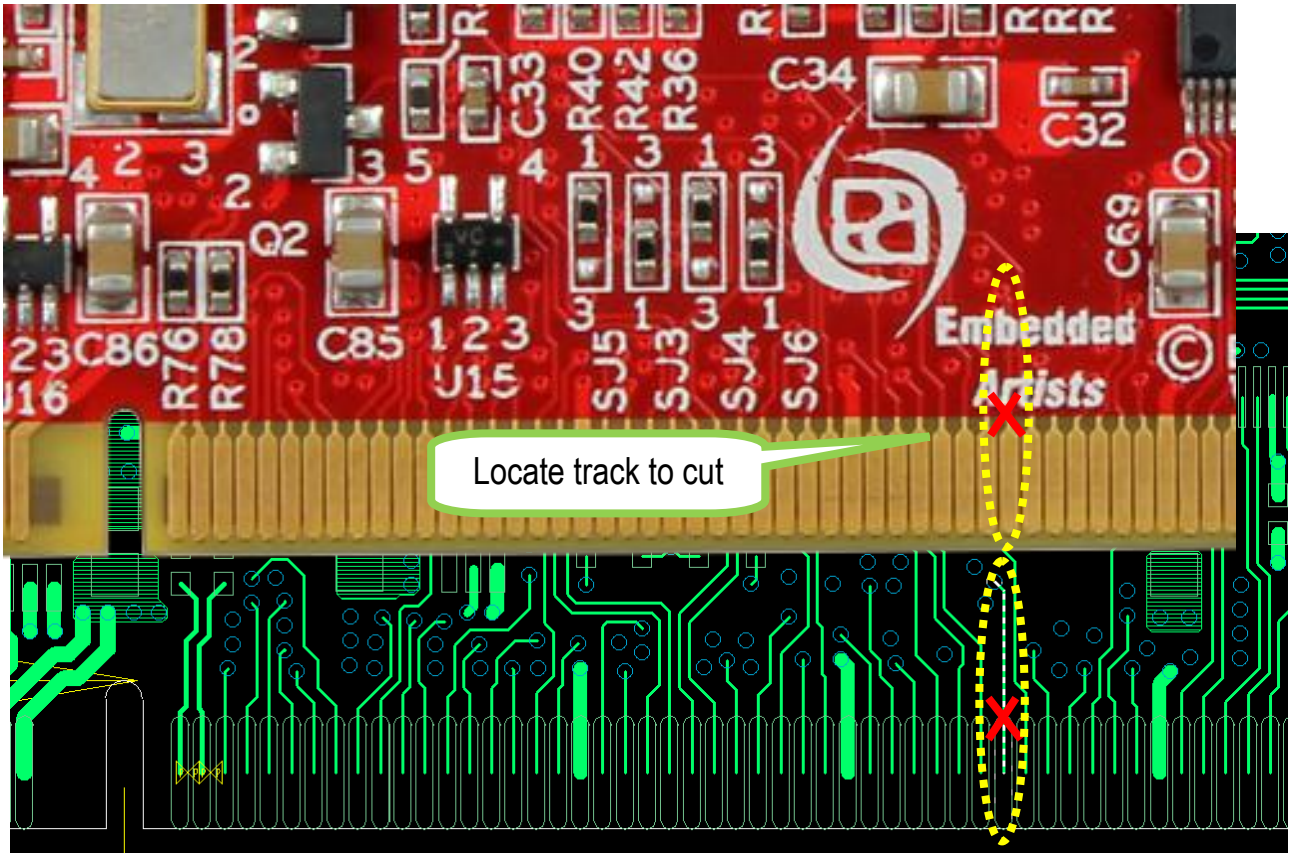

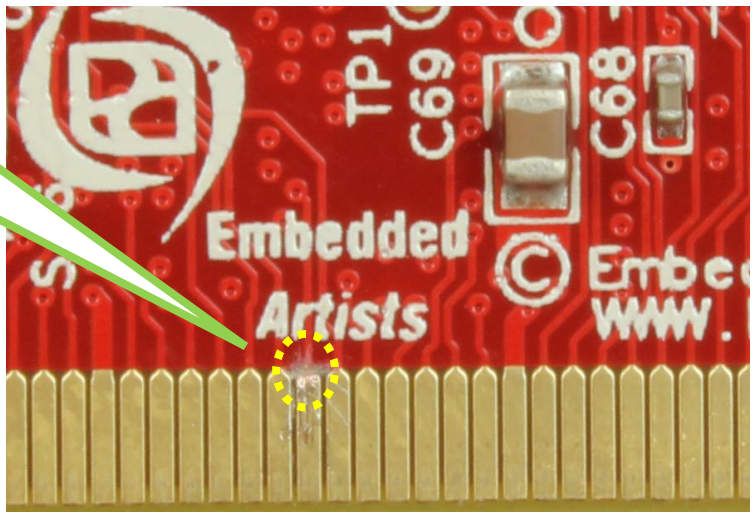

If you have any questions, please contact us at: info@EmbeddedArtists.com

Kind Regards,
Embedded Artists AB
June 4, 2013

Embedded Artists AB
Södra Promenaden 51
SE-211 38 Malmö
Sweden

Phone/Fax: +46 (0)40-611 00 93
E-mail: info@embeddedartists.com
http://www.embeddedartists.com

© Copyright 2010 Embedded Artists AB. All rights reserved. All other products or service names mentioned herein are trademarks of their respective holders and should be treated as such.

Privacy policy: http://www.embeddedartists.com/privacy.php
Legal: http://www.embeddedartists.com/legal.php