DISPLAY ELECTRONIC ASSEMBLY VISIONS

ELECTRONIC ASSEMBLY *new display design*

Issue 12.2018

THE SERIALS

DOTMATRIX DISPLAYS WITH RS-232



Accessory:
cable EA KV24-9B
length: 1,50 m



EA SER162-92NLED
with snap in housing

FEATURES

* 32 DIFFERENT SIZES OF DISPLAYS AVAILABLE (1x8 UP TO 16x40)
* SUPPLY VOLTAGE +5V OR OPTIONAL 9..35V[1)]
* INCL. LED-ILLUMINATION SWITCHABLE BY MEANS OF SOFTWARE
* 25 DISPLAYS WITH YELLOW/GREEN LED-BACKLIGHT
* 7 DISPLAYS WITH LOW POWER WHITE LED-BACKLIGHT
* 3 DISPLAYS 1X8, 2X16 AND 4X20 WITH SNAP IN HOUSING
* HIGH CONTRAST SUPERTWIST LCD
* INCL. FRONTAL BEZEL WITH ANTIGLARE GLASS[2)]
* AUTOMATIC LINE MANAGEMENT
* CR / LF / SCROLL / CURSOR POSITIONING
* BAUDRATE SETTING BY JUMPER: 300, 1200, 2400 OR 9600 BAUD
* POTI FOR CONTRAST ADJUSTMENT ON BOARD
* MULTIPLE DISPLAYS ON SINGLE RS-232C

OPTIONS

* SUPPLY +9..35V= INSTEAD OF +5V=	**EA OPT-9/35V**[1)]
* RS-422 INTERFACE INSTEAD OF RS-232 (STANDARD)	**EA OPT-RS422**[1)]
* DIP-SWITCH FOR ADDRESS INSTEAD OF SOLDERBRIDGE	**EA OPT-DIP6**[1)]

ACCESSORIES

* CABLE WITH 9-PIN D-SUB FEMALE PLUG FOR PC	**EA KV24-9B**

[1)] not available with SER308, SER408, SER3016 and SER4016
[2)] not available with SER082-C, SER204-4, SER242-B, SER3016 and SER4016

GENERAL

The Serials represents a complete LCD-Dotmatrix familiy with input circuit and frontal bezel. These LCD-modules also includes a RS-232 interface (or optional RS-422). The mounting is done through holes of the LCD-module, the data connection is made to a standard RS-232C/RS-422 interface. Transfer rate can be set by jumper on 300, 1200, 2400 or 9600 Baud. All cursor controls (line feed etc.) are performed automatically. All displays feature LED-backlight illumination. Matching frontal bezel with antiglare glass is included also.

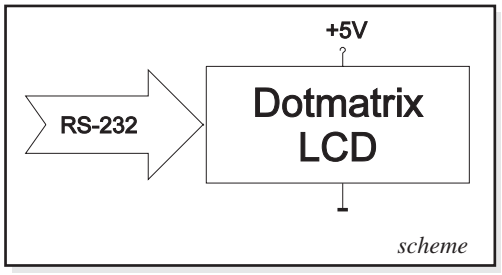

scheme

POWER SUPPLY / CONTRAST ADJUSTMENT

Supply voltage is +5V, current consumption depends on type of display and its illumination (100-800 mA, see table on page 20). The Serials can be connected to power either by screw terminals or with RS-232 connector. Display contrast is adjustable by potentiometer.
important: It is imperative that the polarity is correct. Even very brief polarity reversal can damage the entire operating unit immediately and irreparably.

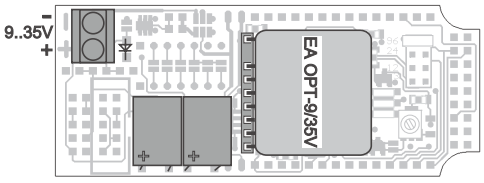

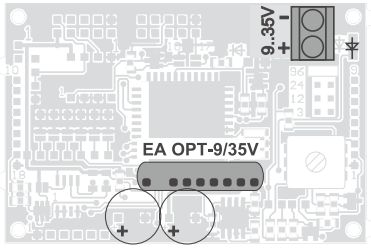

9..35V Versorgung bei Displays im Snap-In

MULTIPLE DISPLAYS ON A SINGLE RS-232C

A single RS-232C can operate a number of displays. For that an individual adress must be assigned to each display. Commands "Select/Deselect" will target each individual display.

Adresseinstellung per Lötbrücken

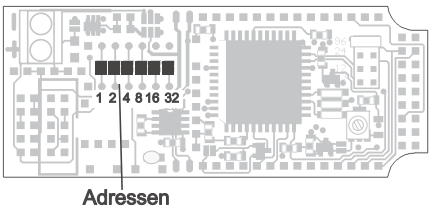

Adresseinstellung über DIP-Schalter

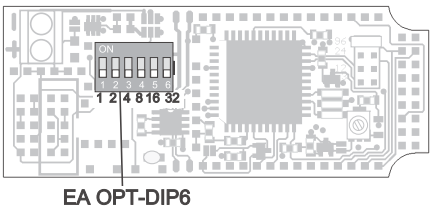

Adresseinstellung bei Displays im Snap-In

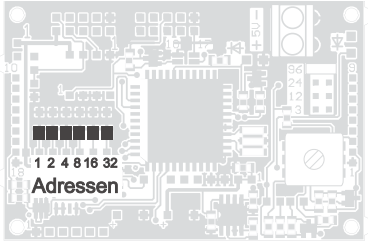

[1] not available with SER308, SER408, SER3016 and SER4016
[2] not available with SER082-C, SER204-4, SER242-B, SER3016 and SER4016

Printing and typographical errors reserved.
ELECTRONIC ASSEMBLY reserves the right to change specifications without prior notice.

COMMANDS, DATA TRANSFER

All incoming datas will be largely interpretated as ASCII datas. When display fills up, the characters automatically scroll to the top. CR/LF will be recognized and executed. FF (12d/$0C) clears the display. Cursor can be set manually by command i.e. "ESC O" (ESC=27d/$1B).

TABLE OF COMMANDS							after Reset
Command	**Code**					**Remark**	
Formfeed FF (dec.:12)	^L					Clear screen and place cursor to home position (1,1)	
Carriage Return CR (13)	^M					Set cursor into first column left hand	
Linefeed LF (dec.:10)	^J					Move cursor down to next line	
Cursor positioning	ESC	O	n1	n2		n1=column; n2=line; home-position (1,1) top left hand	1,1
Cursor Form	ESC	C	0			Hidden cursor	3
			1			Cursor in form of a flashing block	
			2			Cursor as an underscore	
			3			Cursor in form of a flashing block with an underscore	
Display Mode	ESC	M	1			Clear-mode; autoflow OFF	4
			2			Clear-mode; autoflow ON	
			3			Scroll-mode; autoflow OFF	
			4			Scroll-mode; autoflow ON	
Select / Deselect	ESC	S	adr			Select interface adress adr=0..254; (adr 255=all)	select-ed
		D				Deselect interface adress adr=0..254; (adr 255=all)	

The 1-line, 2-line and 4-line displays offer beside standard-commands additional options:

additional commands for 1..4 line displays						after Reset
Command	**Code**				**Remark**	
Display Mode	ESC	M	5		Overwrite-mode; autoflow OFF	4
			6		Overwrite-mode; autoflow ON	
Convert Character Code	ESC	U	0		no character code conversion	1
			1		convert character code to IBM-Code (for englisch/japanisch character set)	
Define character	ESC	Z	n1	8 x data...	n1=character no. (0..7); data = 8x bytes for new character	
LED backlit on/off	ESC	L	n1		LED backlit n1=0: off, n1=1: on; n1=2: invert; n1=3..255 n1/10 sec. on	on
Write output port	ESC	Y	n1	n2	n1=0: Set all 6 output ports in accordance with n2 (=6-bit binary value) n1=1..8: Reset output port n1 (n2=0); set (n2=1); invert (n2=2)	all 1
Version Number	ESC	V			Shows the version number on the display	
Reset	ESC	R			Resets and re-initializes the display and controller. Before sending new data over the RS-232/RS-422 wait 500.	

The 8-line and 16-line displays offer beside standard-commands additional options:

additional commands for 8- and 16-line displays						after Reset
Command	**Code**				**Remark**	
Display Mode	ESC	M	5		Clear-mode; autoflow OFF	4
			6		Clear-mode; autoflow ON	
			7		Scroll-mode; autoflow OFF	
			8		Scroll-mode; autoflow ON	
Set letter type	ESC	N			Set standard type; black letters; bright background	N
		I			Set inverse letters; bright letters; black background	
		B			Flashing letters; black letters flash on bright background	
		L			Invers+flashing; bright letters flash on black background	
Save actual settings	ESC	P			Saves cursorform, display-mode and font-type in EEPROM	
Select / Deselect	ESC	A	adr		Assignes a new select/deselect adress (8 bit) to the interface	

RS-232C CONNECTION / BAUD RATES

Connection to RS-232C or RS-422 interface is made on a 2x5 pin type socket. With cable EA KV24-9B (accessories not for RS-422) **The Serials** are ready to be connected directly to a PC. Transfer rate can be set by jumper on 300, 1200, 2400 or 9600 Baud.

RS-232C socket (2x5 pins)						
Pin	Symbol	Function		Pin	Symbol	Function
1	VDD	+5V		2	DCD	connection to DSR and DTR
3	DSR	connection to DCD and DTR		4	NC	not connected
5	CTS	CTS and RTS bridged		6	RXD	data input
7	RTS			8	DTR	connection to DSR and DCD
9	RXD5 CMOS	close LB10+LB17		10	GND	0V

RS-422 socket (2x5 pins)						
Pin	Symbol	Function		Pin	Symbol	Function
1	VDD	+5V		2	Data In-	Receive Data
3	Data In+	Receive Data		4	NC	not connected
5	NC	not connected		6	HS In-	HS In- and HS Out- bridged
7	HS In+	HS In+ and HS Out+ bridged		8	HS Out-	
9	HS Out+			10	GND	0V

Data format:



If no jumper is set during power on, the display switches into self test mode and shows its character set.

If the operating unit is ordered together with the EA OPT-RS422 option, special RS-422 drivers are fitted. The pin assignment in the table on the right then applies.

Incidentally, the same serial data with 5V level and CMOS logic is available at Pin 9. These level are suitable for direct connection to a µC. If these signal is used, the solder straps LB 10 + LB 17 must be closed!

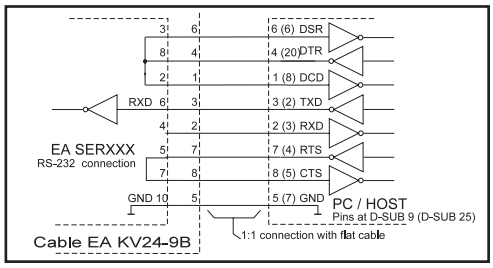

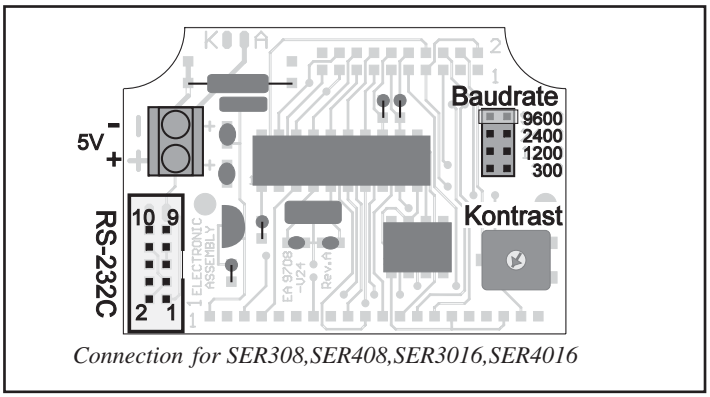

Connection for SER308,SER408,SER3016,SER4016

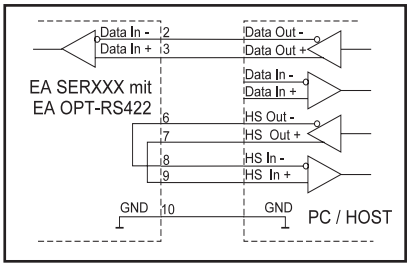

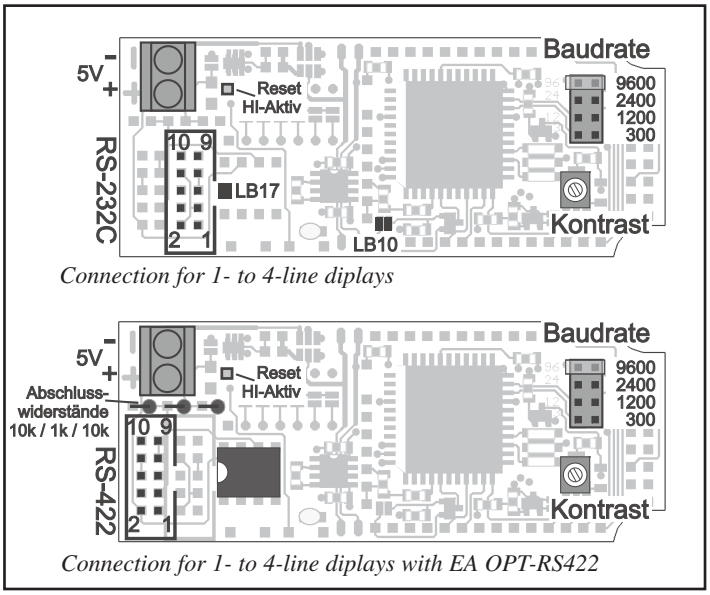

Connection for 1- to 4-line diplays

Connection for 1- to 4-line diplays with EA OPT-RS422

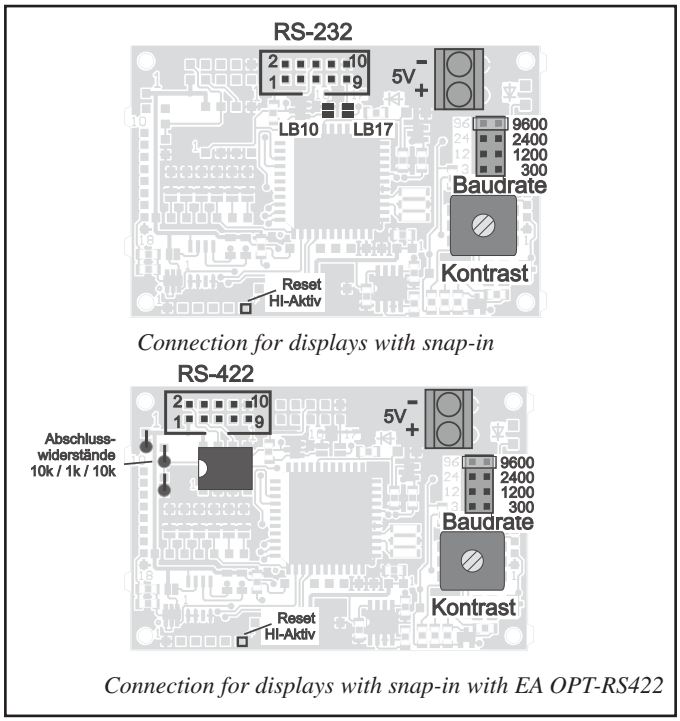

Connection for displays with snap-in

Connection for displays with snap-in with EA OPT-RS422

Printing and typographical errors reserved.
ELECTRONIC ASSEMBLY reserves the right to change specifications without prior notice.

DIGITAL OUTPUT[1)]

There are up to 6 digital outputs OUT1..OUT6. They share with the solder link for address setting (cannot be used with EA OPT-DIP6). When one or more outputs are used, the possibility for address set is limited automatically.

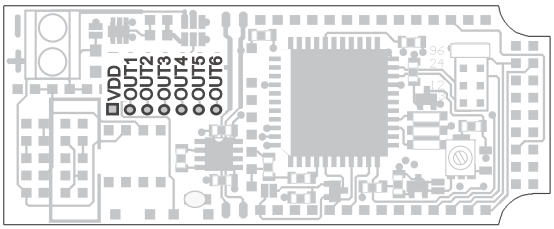

All versions except EA S ERxxx-92

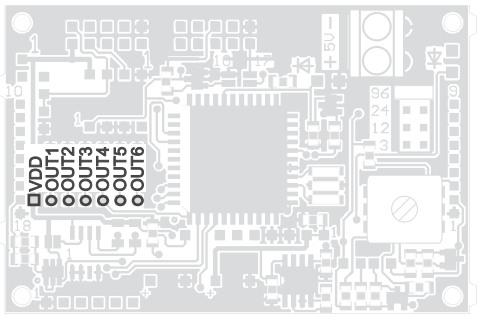

Displays with Snap-In case (EA SERxx-92)

After Power-On all output are set to HIGH. Setting an output will be done by following command:
'ESC Y n1 n2'
n1: Output no. 1, 2, 3, 4, 5 or 6
n2=0: Output set to LOW (0V)
n2=1: Output set to HIGH (5V, EA SER204-92NLED: 3.3V)
n2=2: Invert output

APPLICATION EXAMPLE[1)]

Each output line provides a NPN transistor with about 50kOhm pull-up resistor; i.e. only LO level is able to supply about 10mA. In summary current for OUT1..OUT6 may not exceed 15mA. HIGH level is able to source up to 100µA only. Driving a higher load signal must be amplified by an external transistor or MOSFET.

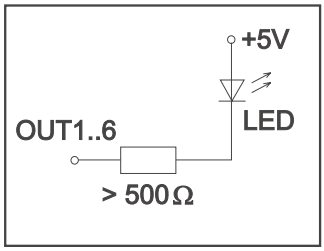

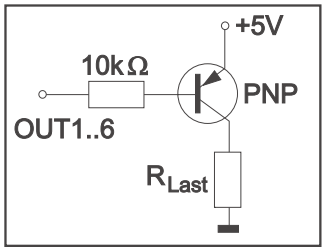

[1)] not for SER308, SER408, SER3016 and SER4016

SELF DEFINED CHARACTER[1)]

8 character (ASCII codes $00..$07) are presetted with " ", "±", "²", "³", "ß", "Ä", "Ö", "Ü" and can be redefined with the command "ESC Z n1 data...". After re-definition the presetted codes are no longer available. It makes sense to switch off the relocation of ASCII codes via command 'ESC U 0'.
After power-on or reset the predefined codes are avaiable again.
Example:
ESC Z $00 $04 $04 $04 $04 $15 $0E $04 $00
After that, character code $00 is defined as an downside arrow.
Note: For definition 8 data bytes are necesary.

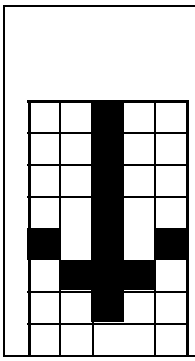

character data					
bit value					hex (dez)
16	8	4	2	1	
0	0	1	0	0	$04 (4)
0	0	1	0	0	$04 (4)
0	0	1	0	0	$04 (4)
0	0	1	0	0	$04 (4)
1	0	1	0	1	$15 (21)
0	1	1	1	0	$0E (14)
0	0	1	0	0	$04 (4)
0	0	0	0	0	$00 (0)

[1)] not for SER308, SER408, SER3016 and SER4016: only the complete character set can be exchanged

CHARACTER SET: 1- TO 4-LINE DISPLAYS

All character listed beside are built-in for the 1- to 4-line displays.

Lower 4 bit \ Upper 4 bit	0000 ($0x)	0001 ($1x)	0010 ($2x)	0011 ($3x)	0100 ($4x)	0101 ($5x)	0110 ($6x)	0111 ($7x)	1000 ($8x)	1001 ($9x)	1010 ($Ax)	1011 ($Bx)	1100 ($Cx)	1101 ($Dx)	1110 ($Ex)	1111 ($Fx)
xxxx0000 ($x0)				0	@	P	`	p				—	夕	ミ	α	p
xxxx0001 ($x1)	±		!	1	A	Q	a	q	ü		｡	ア	チ	ム	ß	±
xxxx0010 ($x2)	²		"	2	B	R	b	r			「	イ	ツ	メ	β	Θ
xxxx0011 ($x3)	³		#	3	C	S	c	s			」	ウ	テ	モ	π	∞
xxxx0100 ($x4)	ß		$	4	D	T	d	t	ä	ö	、	エ	ト	ヤ	Σ	Ω
xxxx0101 ($x5)	Ä		%	5	E	U	e	u			・	オ	ナ	ユ	σ	ü
xxxx0110 ($x6)	ö		&	6	F	V	f	v			ヲ	カ	ニ	ヨ	μ	÷
xxxx0111 ($x7)	ü		'	7	G	W	g	w			ァ	キ	ヌ	ラ	q	π
xxxx1000 ($x8)			(	8	H	X	h	x			ィ	ク	ネ	リ	ɾ	°
xxxx1001 ($x9)	±		)	9	I	Y	i	y		ö	ゥ	ケ	ノ	ル	ө	y
xxxx1010 ($xA)	LF		*	:	J	Z	j	z		ü	ェ	コ	ハ	レ	Ω	千
xxxx1011 ($xB)	³	ESC	+	;	K	[	k	{			ォ	サ	ヒ	ロ	×	ɾ
xxxx1100 ($xC)	FF		,	<	L	¥	l	|			ャ	シ	フ	ワ	¢	円
xxxx1101 ($xD)	CR		−	=	M	]	m	}			ュ	ス	ヘ	ン	ŧ	²
xxxx1110 ($xE)	ö		.	>	N	^	n	→	Ä	ß	ョ	セ	ホ	゛	ñ	³
xxxx1111 ($xF)	ü		/	?	O	_	o	←			ッ	ソ	マ	°	ö	

CHARACTER SET: EA SER204-92HNLED/-92HNLEK

... does have a different character set.

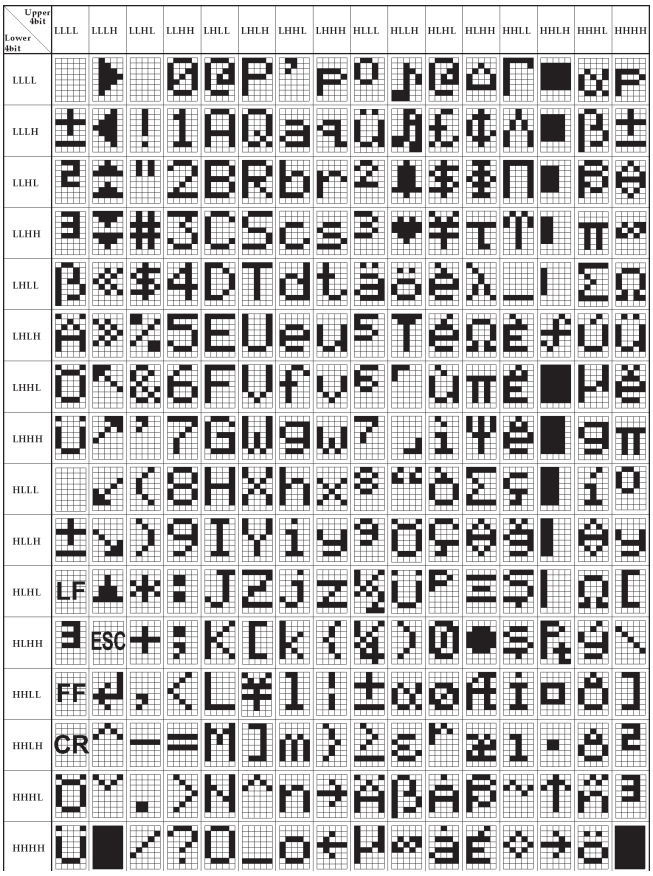

CHARACTER SET: 8- AND 16-LINE DISPLAYS

All 8- and 16-line displays **EA SER308, SER408, SER3016 und SER4016** do provide the extended IBM character set (codes 32..255) incl. frame symbols. It is also possible to excange the character set totally (e.g. for cyrillic or special codes).This can be done together with the tools on **EA DISK9708**[*].

Upper \ + Lower	$0 (0)	$1 (1)	$2 (2)	$3 (3)	$4 (4)	$5 (5)	$6 (6)	$7 (7)	$8 (8)	$9 (9)	$A (10)	$B (11)	$C (12)	$D (13)	$E (14)	$F (15)
$20 (dez: 32)		!	"	#	$	%	&	'	(	)	*	+	,	-	.	/
$30 (dez: 48)	0	1	2	3	4	5	6	7	8	9	:	;	<	=	>	?
$40 (dez: 64)	@	A	B	C	D	E	F	G	H	I	J	K	L	M	N	O
$50 (dez: 80)	P	Q	R	S	T	U	V	W	X	Y	Z	[	\	]	^	_
$60 (dez: 96)	`	a	b	c	d	e	f	g	h	i	j	k	l	m	n	o
$70 (dez: 112)	p	q	r	s	t	u	v	w	x	y	z	{	|	}	~	⌂
$80 (dez: 128)	Ç	ü	é	â	ä	à	å	ç	ê	ë	è	ï	î	ì	Ä	Å
$90 (dez: 144)	É	æ	Æ	ô	ö	ò	û	ù	ÿ	Ö	Ü	¢	£	¥	ß	ƒ
$A0 (dez: 160)	á	í	ó	ú	ñ	Ñ	ª	º	¿	⌐	¬	½	¼	¡	«	»
$B0 (dez: 176)	░	▒	▓	│	┤	╡	╢	╖	╕	╣	║	╗	╝	╜	╛	┐
$C0 (dez: 192)	└	┴	┬	├	─	┼	╞	╟	╚	╔	╩	╦	╠	═	╬	╧
$D0 (dez: 208)	╨	╤	╥	╙	╘	╒	╓	╫	╪	┘	┌	▒	▒	▒	▒	▒
$E0 (dez: 224)	α	ß	Γ	π	Σ	σ	µ	τ	Φ	Θ	Ω	δ	∞	ø	ε	∩
$F0 (dez: 240)	≡	±	≥	≤	⌠	⌡	÷	≈	°	∙	·	√	n	²	▪	

*) *also in internet at http://www.lcd-module.de/deu/disk/disk9708.zip*

Printing and typographical errors reserved.
ELECTRONIC ASSEMBLY reserves the right to change specifications without prior notice.

EA SER081-92NLED
EA SER081-92NLEK (incl. RS-232 cable EA KV24-9B)

incl. snap in housing EA 0092-KE
1x8,ZH 11.48mm

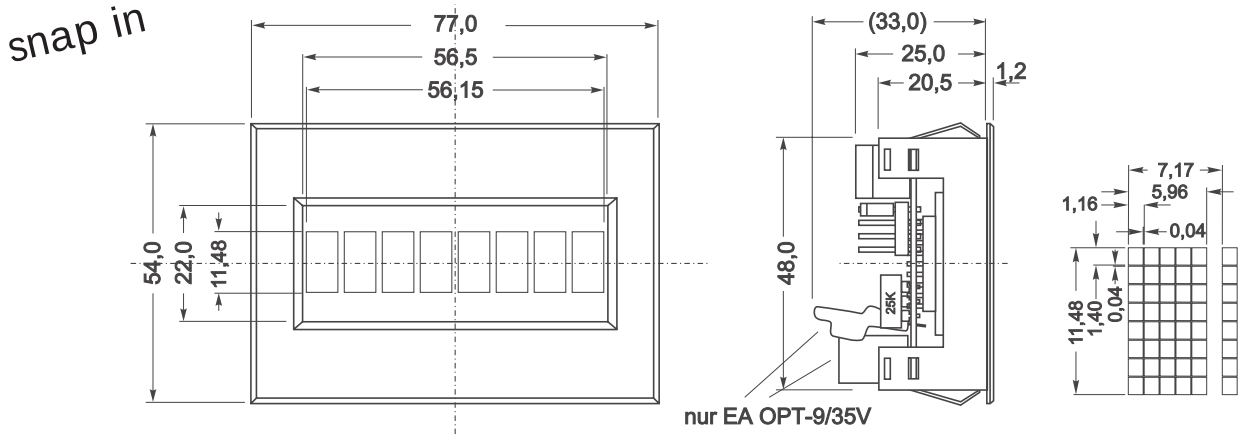

Panel cut out: 70,5$^{+0,5}$ x 48,5$^{+0,5}$ mm

EA SER081-CNLED

incl. frontal bezel EA 017-2UKE
1x8,ZH 10.8mm

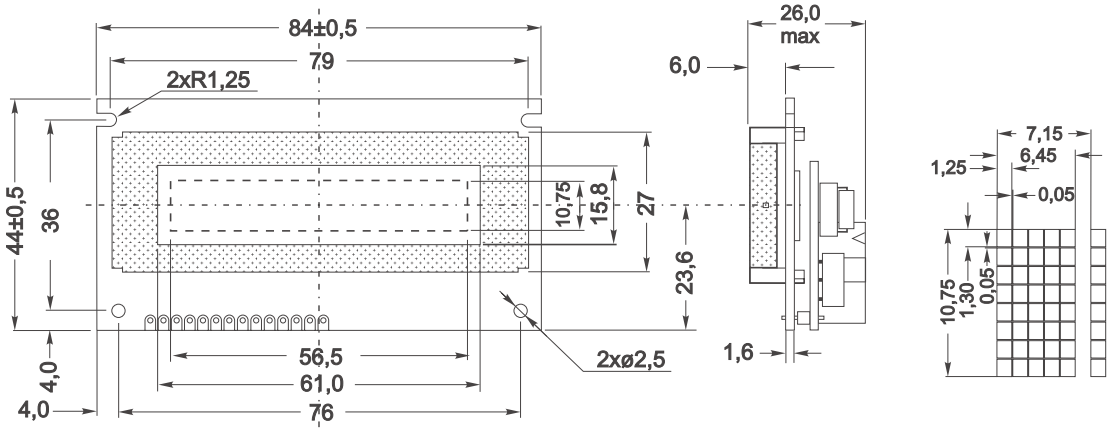

EA SER161-DNLED

incl. frontal bezel EA 017-1UKE
1x16,ZH 6.6mm

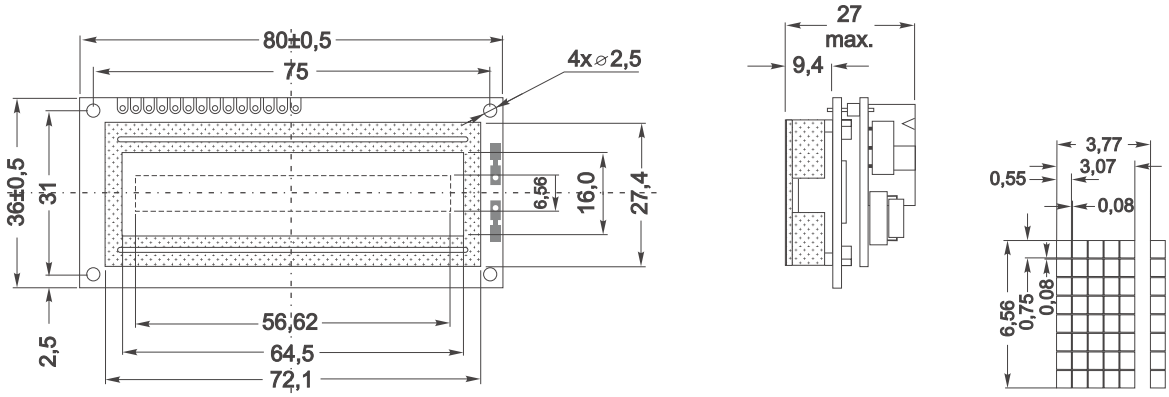

EA SER161-ENLED

incl. frontal bezel EA 017-6UKE
1x16,ZH 9.66mm

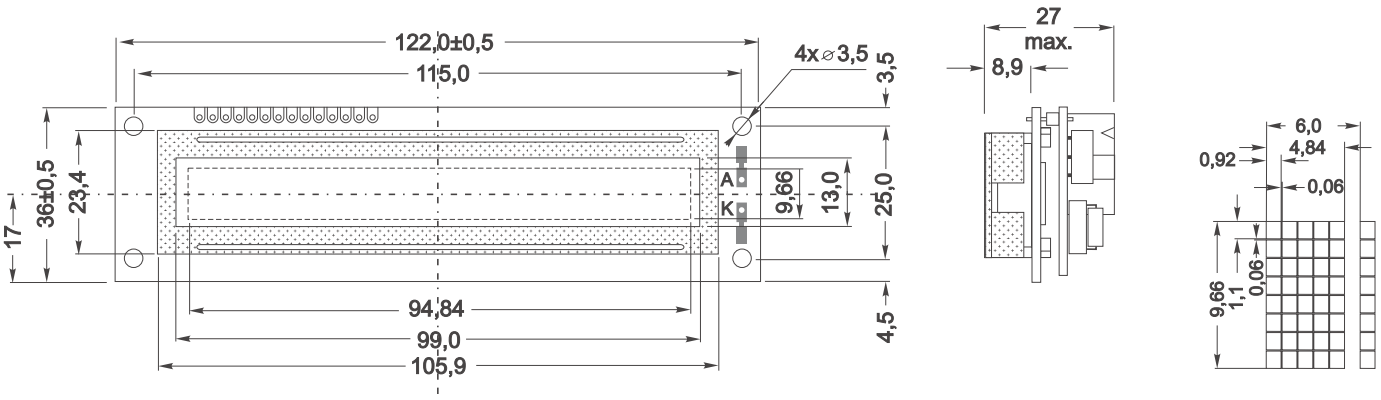

EA SER082-CNLED

incl. frontal bezel EA 017-8UKE
1x8,ZH 11.44mm

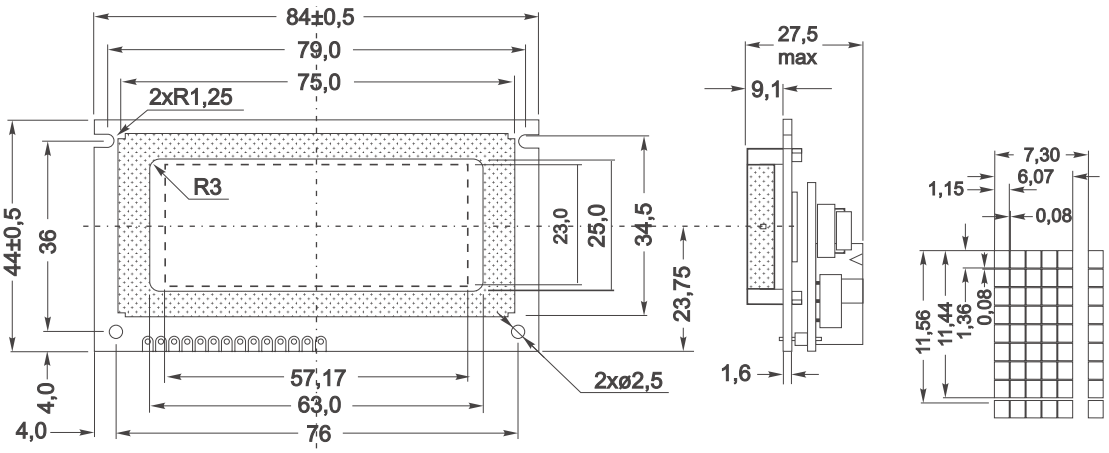

Printing and typographical errors reserved.
ELECTRONIC ASSEMBLY reserves the right to change specifications without prior notice.

EA SER162-N3LW

blue/white

incl. frontal bezel EA 017-2UKE
2x16,ZH 5.55mm

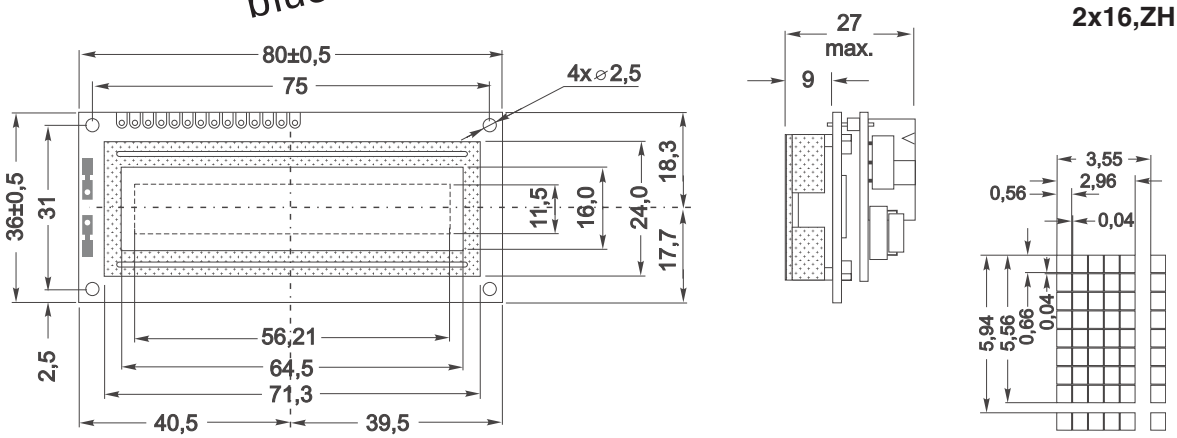

EA SER162-CNLED

incl. frontal bezel EA 017-1UKE
2x16,ZH 4.35mm

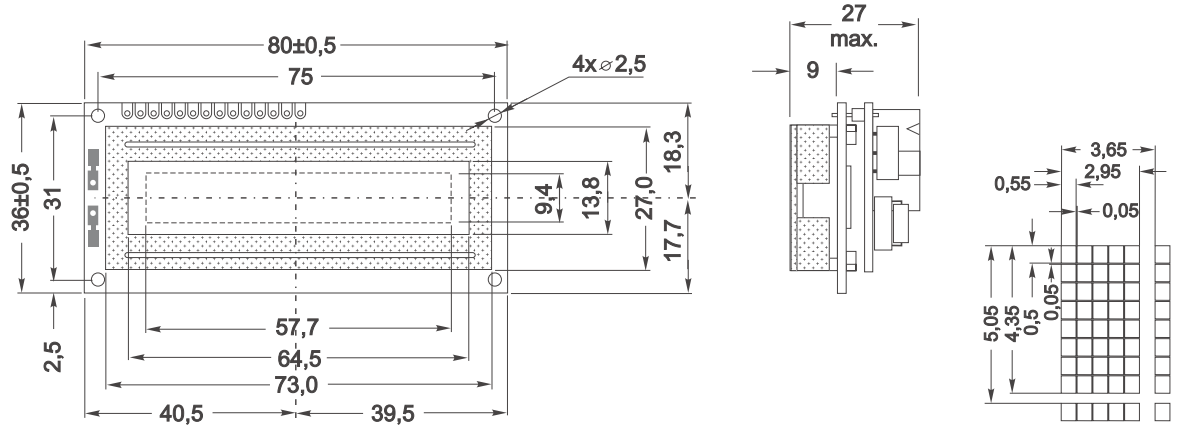

EA SER162-NLED

incl. frontal bezel EA 017-2UKE
2x16,ZH 5.55mm

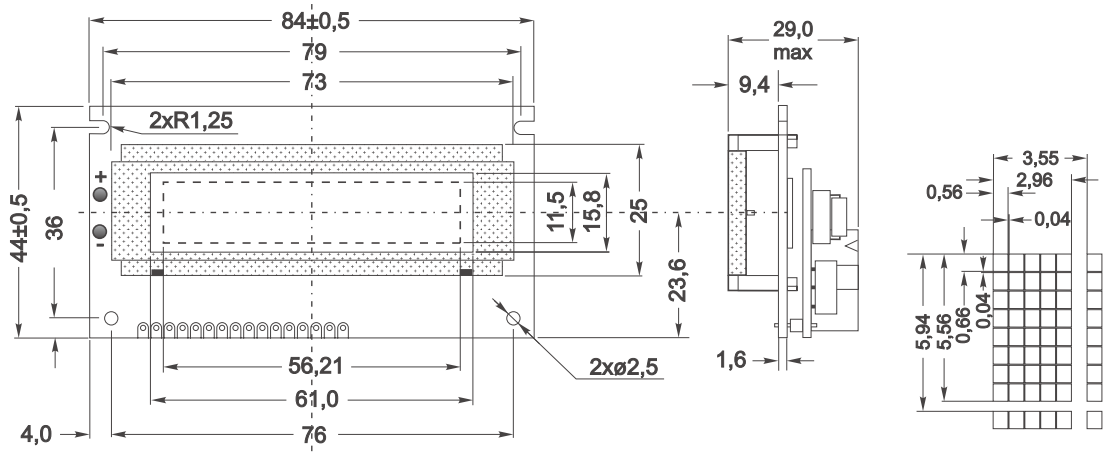

EA SER162-NLW

incl. frontal bezel EA 017-2UKE
2x16,ZH 5.55mm

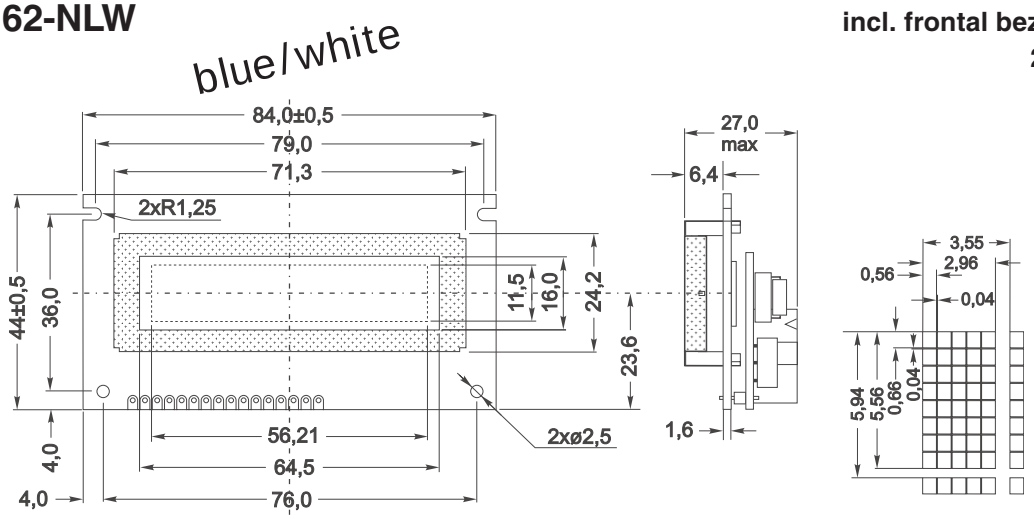

EA SER162-BNLED

incl. frontal bezel EA 017-12UKE
2x16,ZH 9.66mm

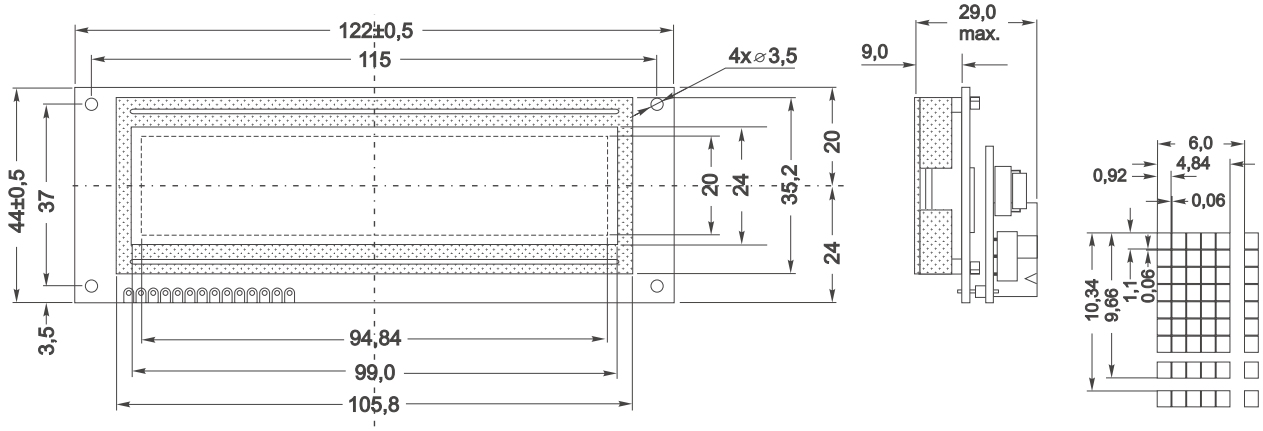

EA SER162-BNLW

incl. frontal bezel EA 017-12UKE
2x16,ZH 9.66mm

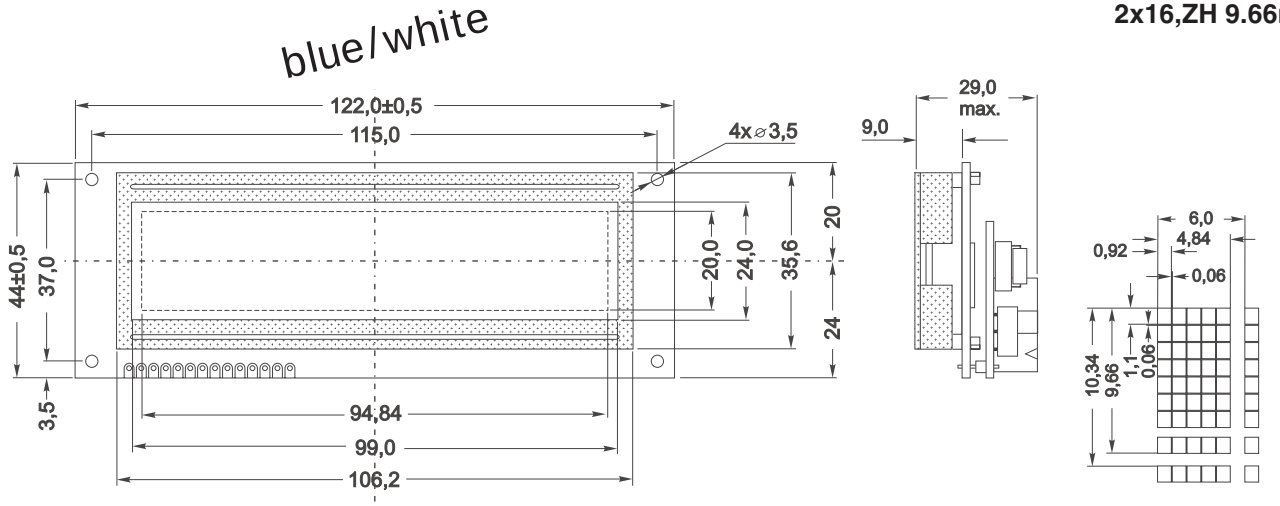

Printing and typographical errors reserved.
ELECTRONIC ASSEMBLY reserves the right to change specifications without prior notice.

EA SER162-92NLED
EA SER162-92NLEK (incl. RS-232 cable EA KV24-9B)

incl. snap in housing EA 0092-KE
2x16,ZH 6.68mm

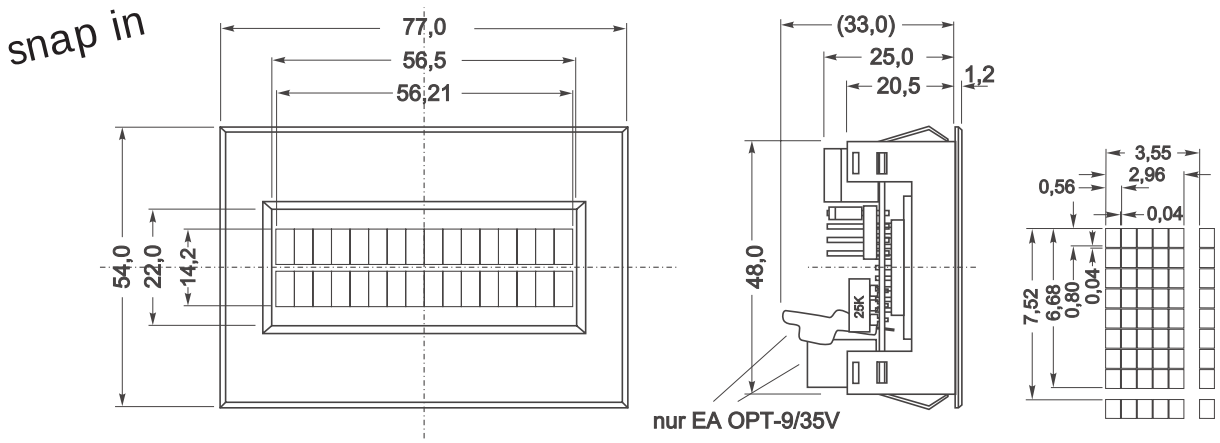

Panel cut out: 70,5$^{+0,5}$ x 48,5$^{+0,5}$ mm

EA SER202-NLED

incl. frontal bezel EA 017-7UKE
2x20, ZH 5.55mm

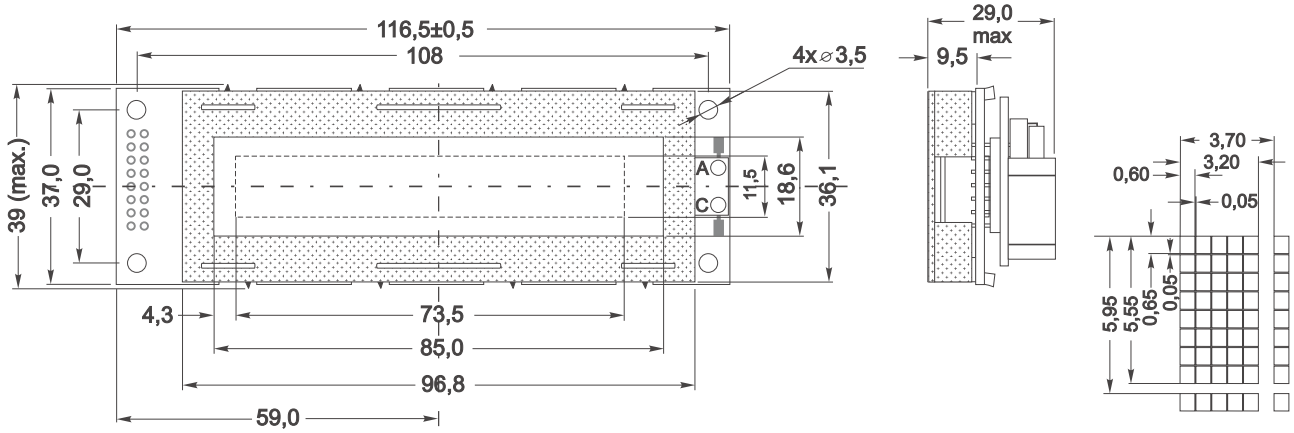

EA SER202-NLW

blue/white

incl. frontal bezel EA 017-7UKE
2x20, ZH 5.55mm

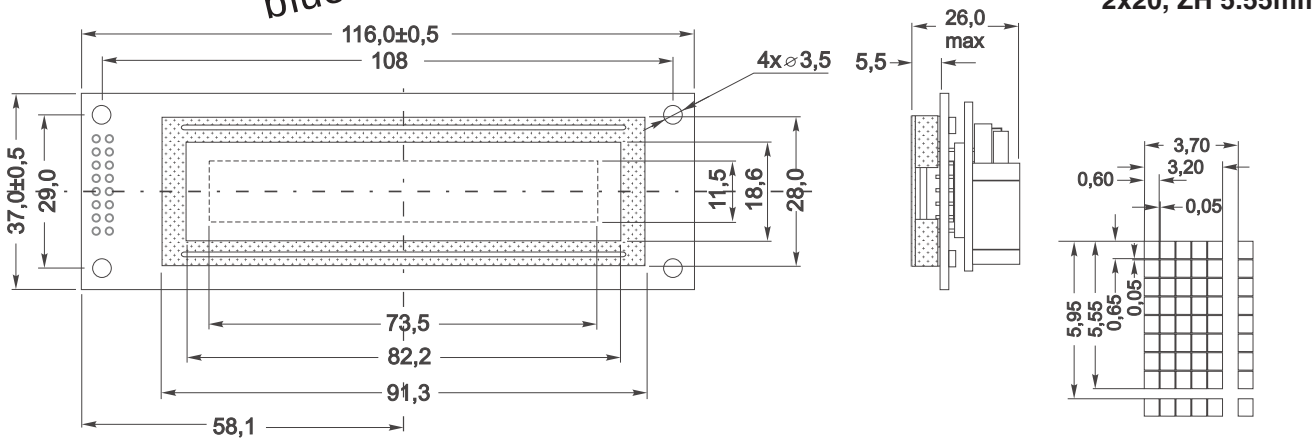

EA SER202-BHNLED

without frontal bezel
2x20,ZH 9.2mm

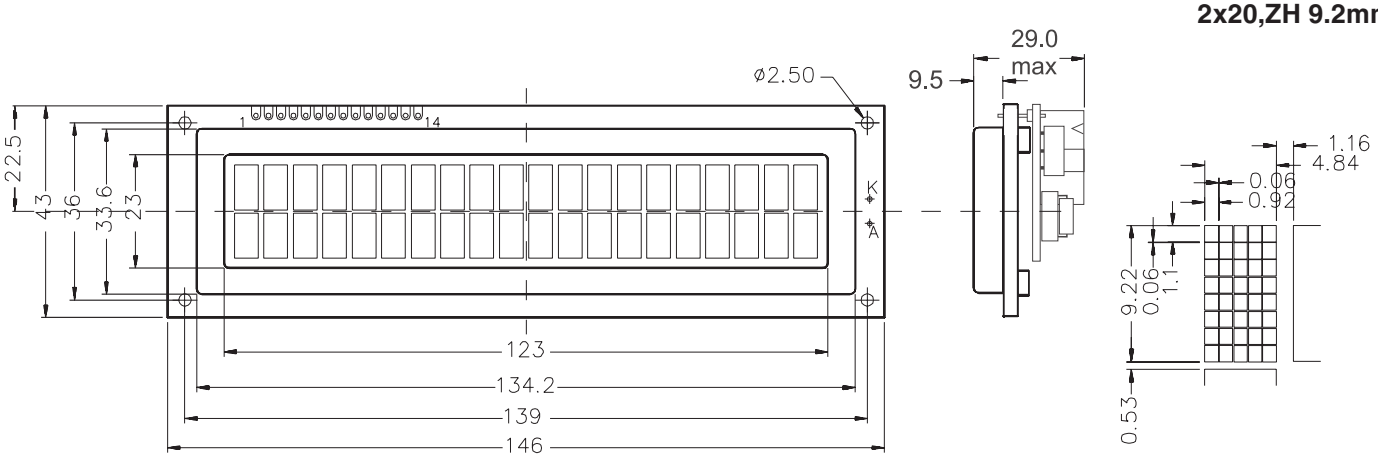

EA SER202-CNLW

2x20,ZH 12.7mm

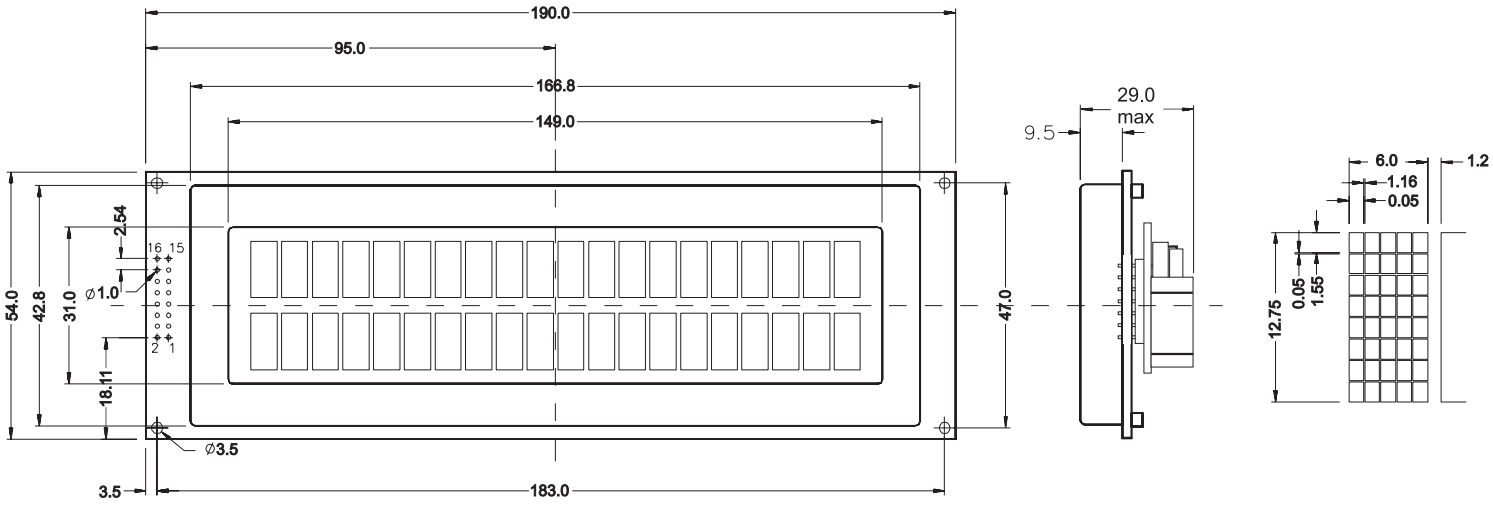

Printing and typographical errors reserved.
ELECTRONIC ASSEMBLY reserves the right to change specifications without prior notice.

EA SER242-NLED

incl. frontal bezel EA 017-14UKE
2x24,ZH 5.55mm

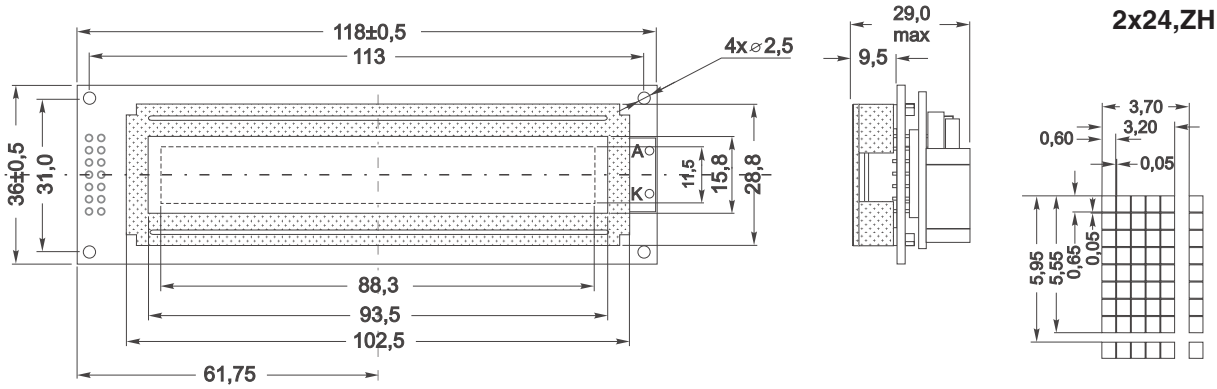

EA SER242-BNLED

without frontal bezel
2x24,ZH 9.66mm

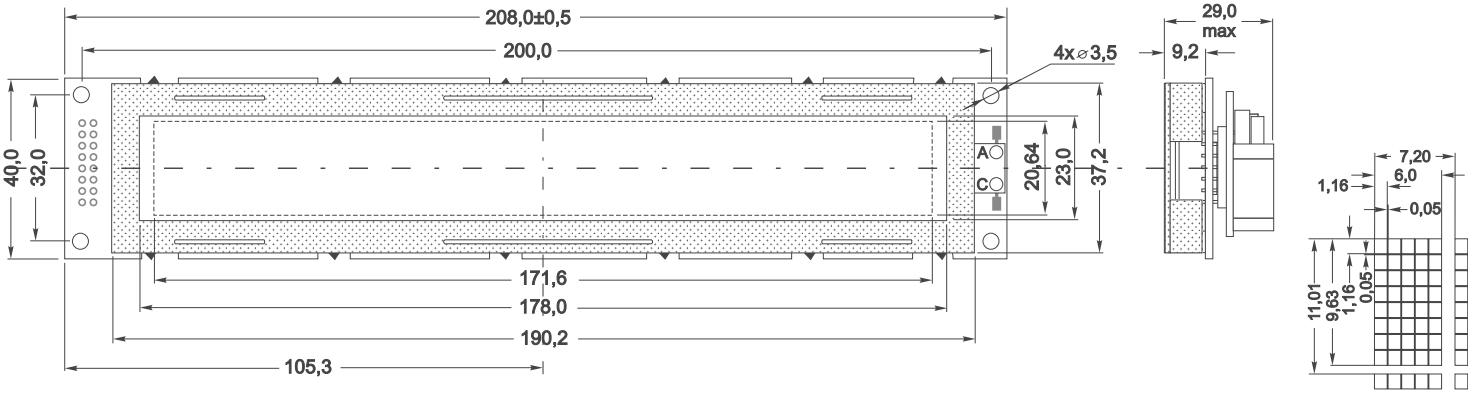

EA SER402-NLED

incl. frontal bezel EA 017-4UKE
2x40,ZH 5.55mm

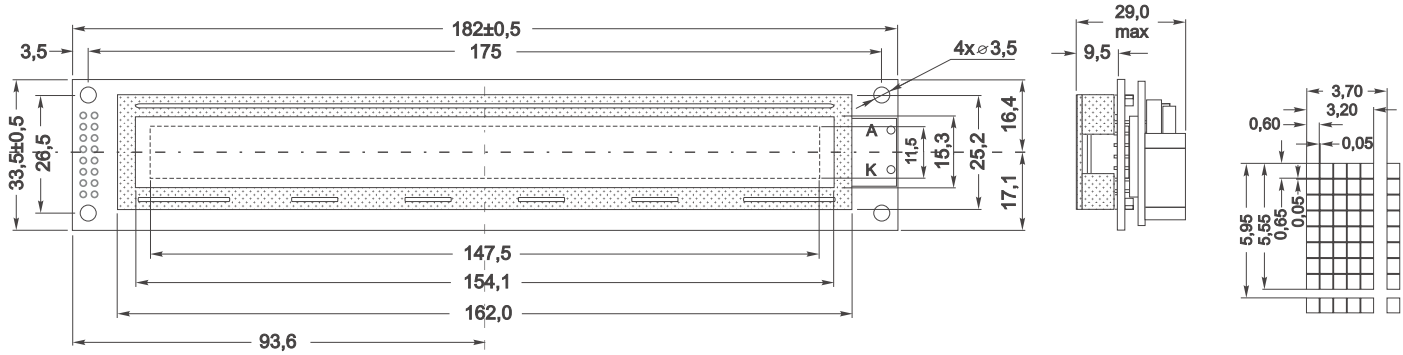

EA SER402-NLW

incl. frontal bezel EA 017-4UKE
2x40,ZH 5.55mm

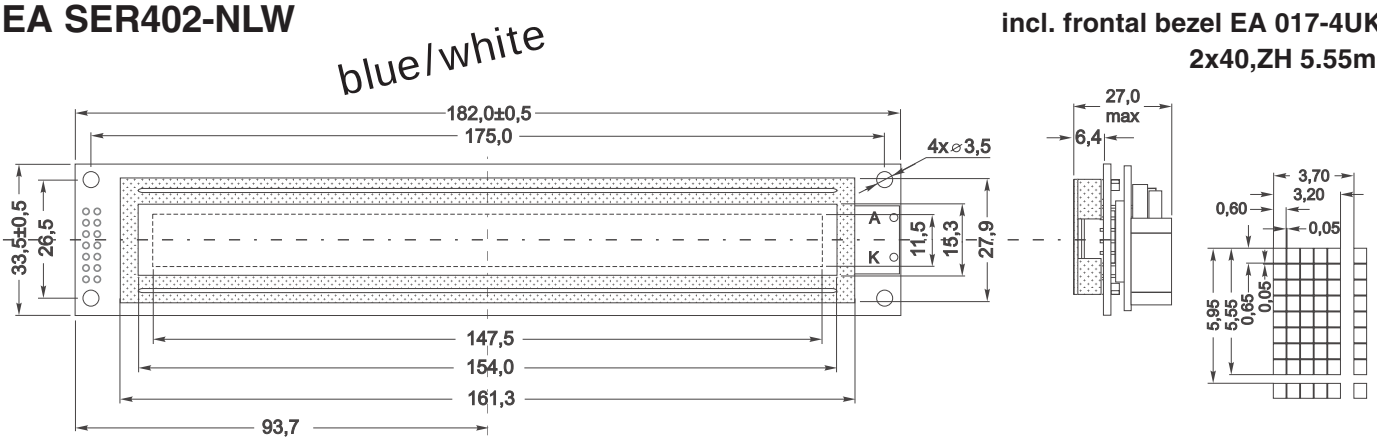

EA SER164-NLED

incl. frontal bezel EA 017-8UKE
4x16,ZH 4.75mm

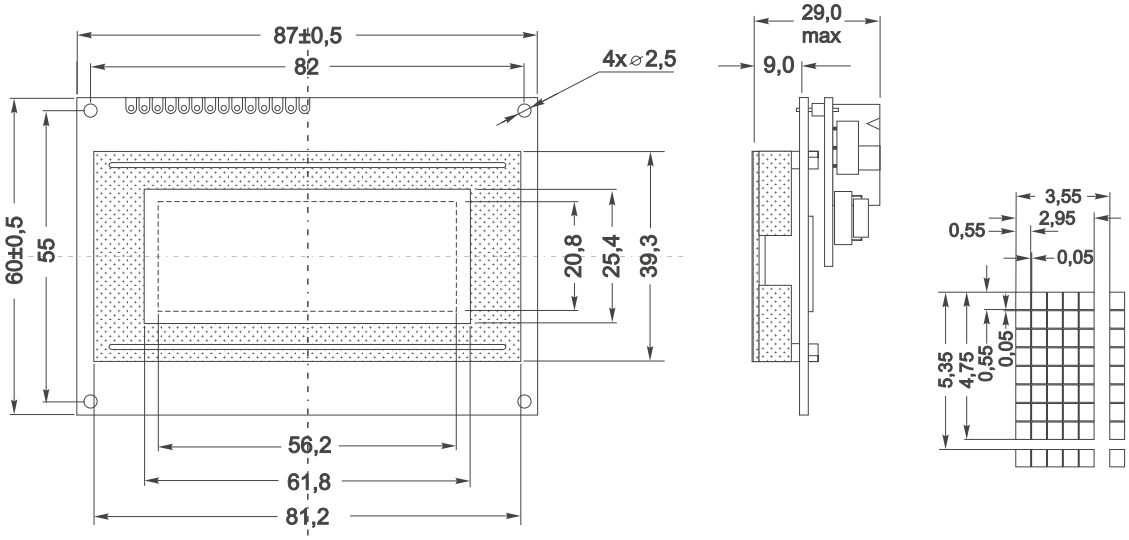

EA SER204-92HNLED
EA SER204-92HNLK (incl. RS-232 cable EA KV24-9B)

incl. snap in housing EA 0092-KE
4x20,ZH 3.73mm

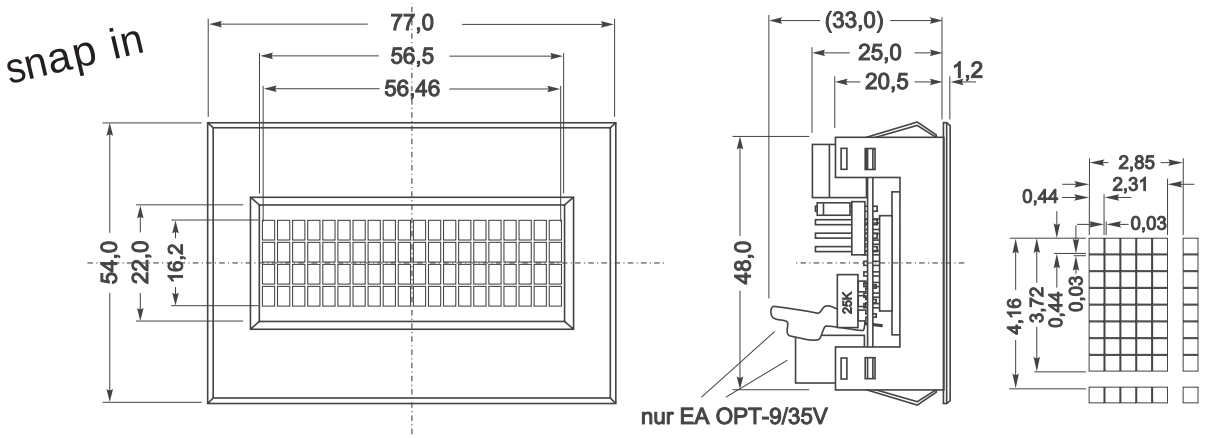

Panel cut out: $70,5^{+0,5}$ x $48,5^{+0,5}$ mm

Printing and typographical errors reserved.
ELECTRONIC ASSEMBLY reserves the right to change specifications without prior notice.

EA SER204-4NLED

without frontal bezel
4x20,ZH 4.03mm

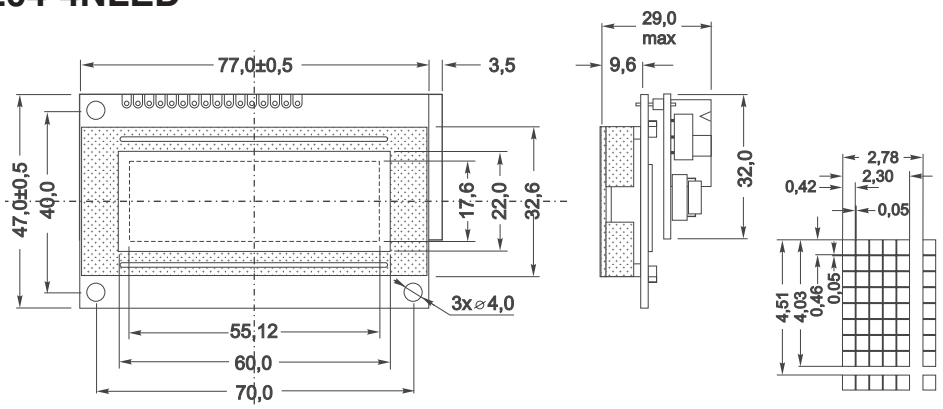

EA SER204-NLED

incl. frontal bezel EA 017-9UKE
4x20,ZH 4.75mm

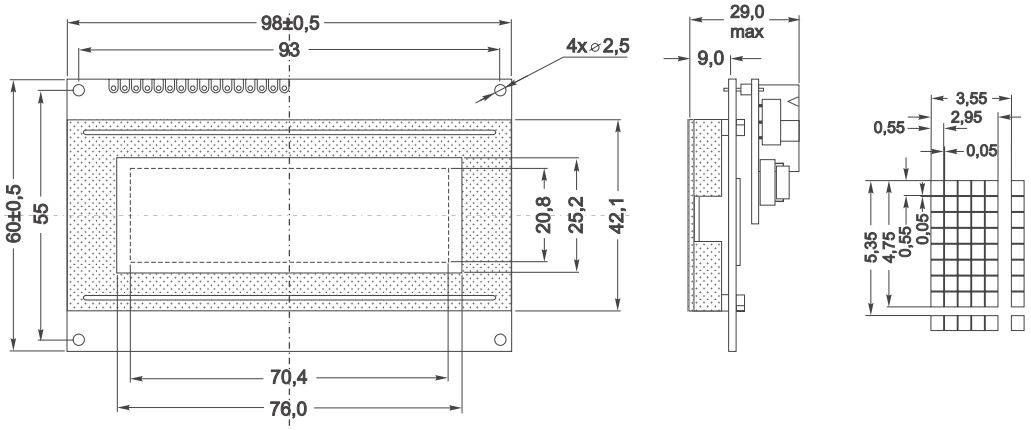

EA SER204-NLW

incl. frontal bezel EA 017-9UKE
4x20,ZH 4.75mm

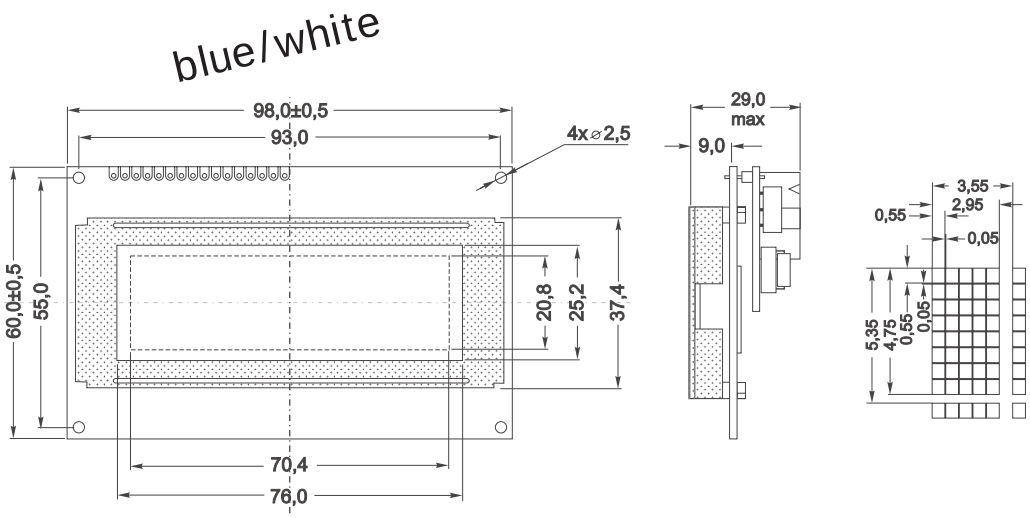

EA SER204-BNLED

incl. frontal bezel EA 017-25KE
4x20,ZH 9.2mm

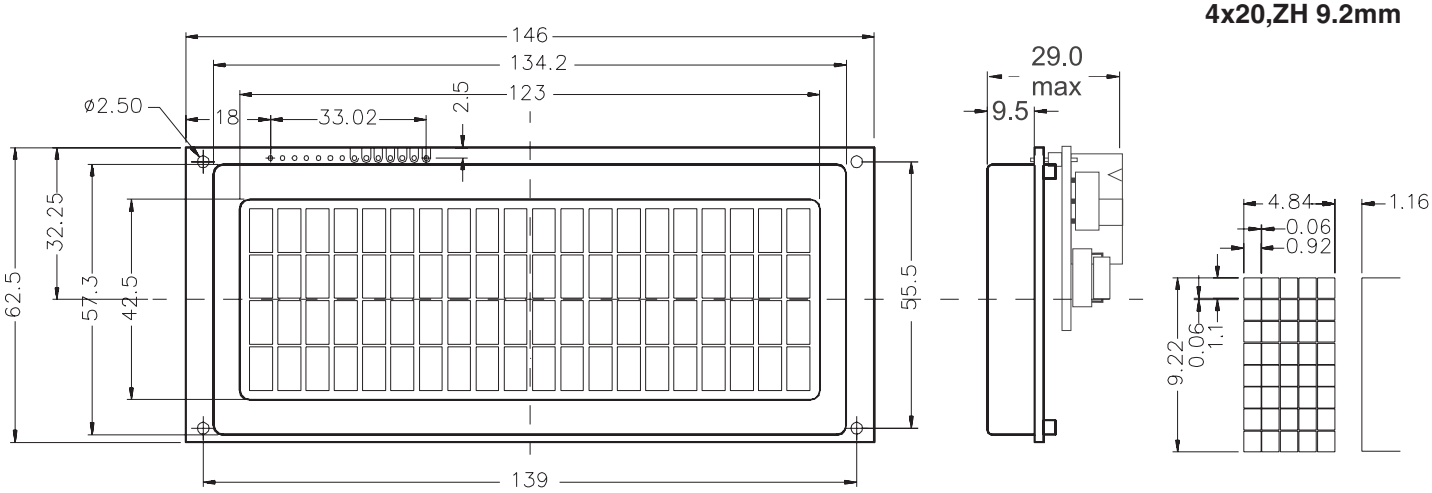

EA SER404-HNLED

incl. frontal bezel EA 017-13UKE
4x40,ZH 4.89mm

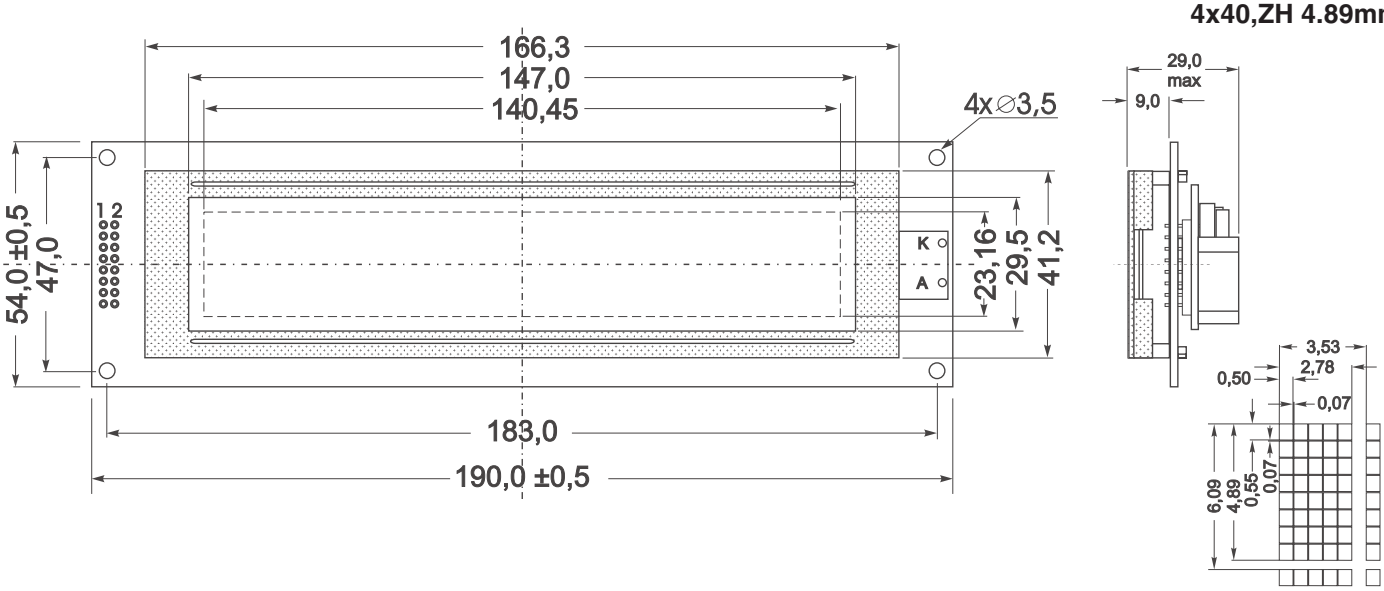

EA SER404-NLW

blue/white

incl. frontal bezel EA 017-13UKE
4x40,ZH 4.89mm

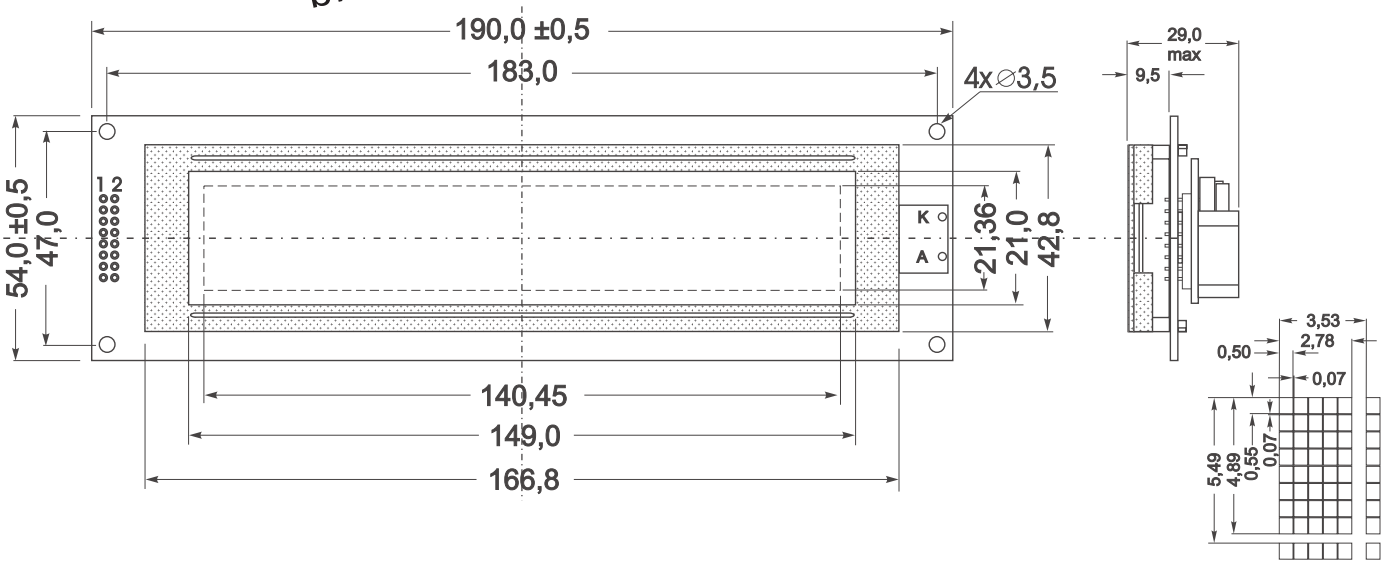

Printing and typographical errors reserved.
ELECTRONIC ASSEMBLY reserves the right to change specifications without prior notice.

EA SER308-NLED / SER408-NLED

incl. frontal bezel EA 017-10UKE
8x30 bold / 8x40,ZH 4.2mm

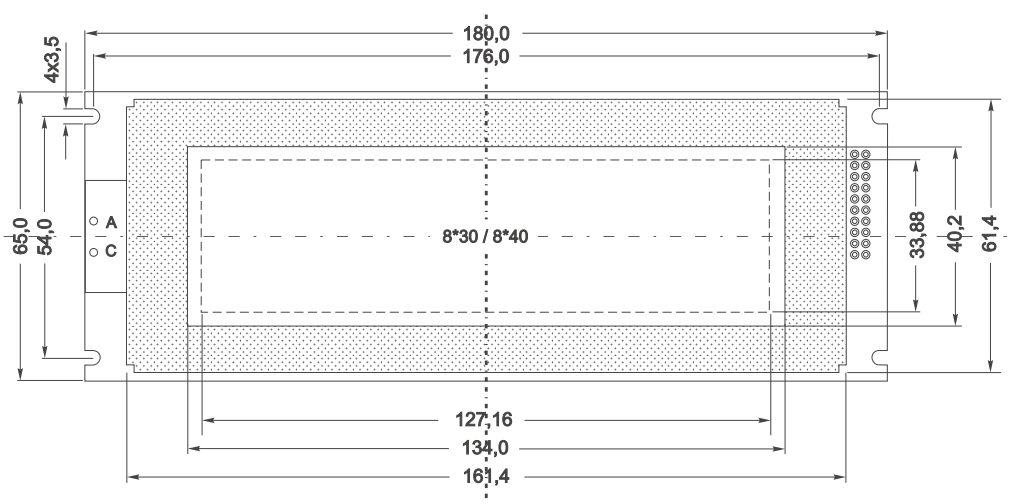

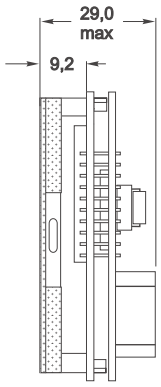

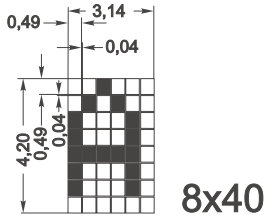

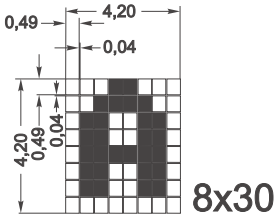

EA SER3016-NLED / SER4016-NLED

without frontal bezel
16x30 bold / 16x40,ZH 3.55mm

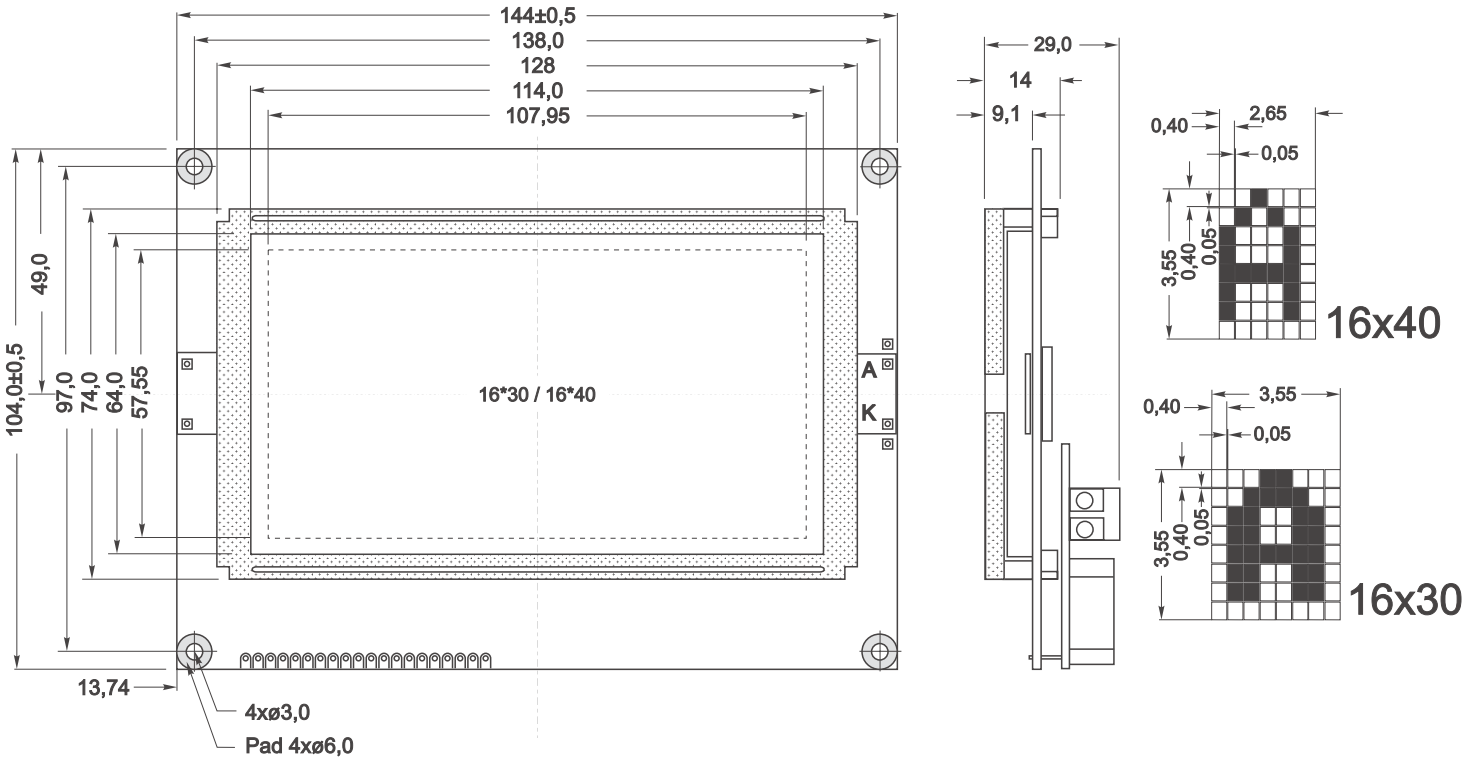

CAUTION!
Use ESD precautionary procedures
Electrostatic sensitive components



Printing and typographical errors reserved.
ELECTRONIC ASSEMBLY reserves the right to change specifications without prior notice.

FRONTAL BEZEL / DIMENSIONS

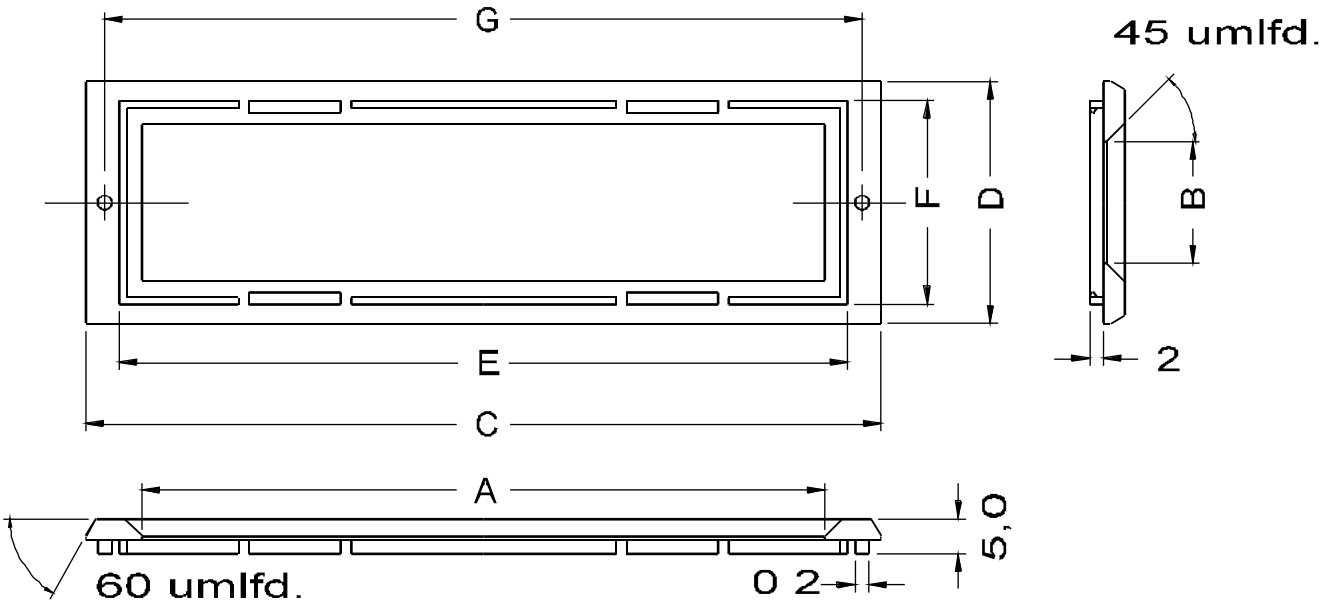

Drawing shows the nose piece for frontal bezels EA 017-xxUKE; EA 017-xxKE have a rim on full circumference.

Display type	Viewing area		Outside dim.		Mounting size			Frontal Bezel
	A	B	C	D	E	F	G	
1 line displays								
EA SER081-CNLED	60,0	14,8	76,0	27,0	66,2	21,2	71,0	EA 017-2U
EA SER161-DNLED	63,5	12,8	79,5	25,0	69,7	19,2	74,5	EA 017-1U
EA SER161-ENLED	98,5	12,8	114,5	25,0	104,7	19,2	109,5	EA 017-6U
2 line displays								
EA SER162-N3LW	60,0	14,8	76,0	27,0	66,2	21,2	71,0	EA 017-2U
EA SER162-CNLED	63,5	12,8	79,5	25,0	69,7	19,2	74,5	EA 017-1U
EA SER162-NLED EA SER162-NLW	60,0	14,8	76,0	27,0	66,2	21,2	71,0	EA 017-2U
EA SER162-BNLED EA SER162-BNLW	97,4	22,4	113,4	34,6	103,6	28,8	108,4	EA 017-12U
EA SER202-NLED EA SER202-NLW	81,5	17,2	97,5	29,4	87,7	23,6	92,5	EA 017-7U
EA SER242-NLED	92,0	14,8	108,0	27,0	98,4	21,2	103,0	EA 017-14U
EA SER402-NLED EA SER402-NLW	153,0	14,8	169,0	27,0	159,2	21,2	164,0	EA 017-4U
4 line displays								
EA SER164-NLED	60,8	24,2	76,8	36,4	67,0	30,6	71,8	EA 017-8U
EA SER204-NLED EA SER204-NLW	75,0	24,2	91,0	36,4	81,2	30,6	86,0	EA 017-9U
EA SER204-BNLED	121,0	41,5	137,0	53,7	127,2	47,9	132,0	EA 017-25
EA SER404-NLED EA SER404-NLW	145,0	28,0	161,0	40,2	151,2	34,4	156,0	EA 017-13U
8 line displays								
EA SER308-NLED EA SER408-NLED	131,0	38,0	147,0	50,2	137,2	44,4	142,0	EA 017-10U

Dimensions in mm

Printing and typographical errors reserved.
ELECTRONIC ASSEMBLY reserves the right
to change specifications without prior notice.

ALL SERIALS - AN OVERVIEW

Serial displays with RS-232 and LED backlight													
Ordering information	Lines x Char.	Char. height	Module dimension			Viewing area		Bezel	Cutout bezel		Current typ.	NeW !	Keypad EA OPT-TAST5x5
			W	H	D	W	H		W	H			
1 line displays													
EA SER081-92NLED	1 x 8	11.48	77.0	54.0	26.0	56.5	22.0	0092-KE	70.5	48.5	100	Snap-In	
EA SER081-CNLED	1 x 8	10.8	84.0	44.0	26.0	61.0	15.8	017-2UKE	66.2	21.2	30		optional
EA SER161-DNLED	1 x 16	6.56	80.0	36.0	27.0	64.5	16.0	017-1UKE	69.7	19.2	100		optional
EA SER161-ENLED	1 x 16	9.66	122.0	33.0	27.0	99.0	13.0	017-6UKE	104.7	19.2	170		optional
2 line displays													
EA SER082-CNLED	2 x 8	11.44	84.0	44.0	27.5	63.0	25.0	017-8UKE	67.0	30.6	90		optional
EA SER162-N3LW	2 x 16	5.55	80.0	36.0	27.0	64.5	16.0	017-2UKE	66.2	21.2	40	blue	optional
EA SER162-CNLED	2 x 16	4.35	80.0	36.0	27.0	64.5	13.8	017-1UKE	69.7	19.2	90		optional
EA SER162-NLED	2 x 16	5.55	84.0	44.0	29.0	61.0	15.8	017-2UKE	66.2	21.2	120		optional
EA SER162-NLW	2 x 16	5.55	84.0	44.0	27.0	64.5	16.0	017-2UKE	66.2	21.2	40	blue	optional
EA SER162-92NLED	2 x 16	6.68	77.0	54.0	26.0	56.5	22.0	0092-KE	70.5	48.5	100	Snap-In	
EA SER162-BNLED	2 x 16	9.66	122.0	44.0	29.0	99.0	24.0	017-12UKE	103.6	28.8	360		optional
EA SER162-BNLW	2 x 16	9.66	122.0	44.0	29.0	99.0	24.0	017-12UKE	103.6	28.8	65	blue	optional
EA SER202-NLED	2 x 20	5.55	116.5	39.0	29.0	85.0	18.6	017-7UKE	87.7	23.6	210		optional
EA SER202-NLW	2 x 20	5.55	116.5	39.0	26.0	85.0	18.6	017-7UKE	87.7	23.6	40	blue	optional
EA SER202-BHNLED	2 x 20	9.2	146.0	43.0	29.0	123.0	23.0	-	127.2	28.4	270		optional
EA SER202-CNLW	2 x 20	12.7	190.0	54.0	29.0	149.0	31.0	-	-	-	100	blue	optional
EA SER242-NLED	2 x 24	5.55	118.0	36.0	29.0	93.5	15.8	017-14UKE	98.4	21.2	150		optional
EA SER242-BNLED	2 x 24	9.66	208.0	40.0	29.0	178.0	23.0	-	-	-	190		optional
EA SER402-NLED	2 x 40	5.55	182.0	33.5	29.0	154.1	15.3	017-4UKE	159.2	21.2	150		optional
EA SER402-NLW	2 x 40	5.55	182.0	33.5	27.0	154.1	15.3	017-4UKE	159.2	21.2	40	blue	optional
4 line displays													
EA SER164-NLED	4 x 16	4.75	87.0	60.0	29.0	61.8	25.4	017-8UKE	67.0	30.6	220		optional
EA SER204-92HNLED	4 x 20	3.73	77.0	54.0	26.0	56.5	22.0	0092-KE	70.5	48.5	100	Snap-In	
EA SER204-4NLED	4 x 20	4.03	80.8	47.0	29.0	60.0	22.0	-	-	-	90		optional
EA SER204-NLED	4 x 20	4.75	98.0	60.0	29.0	76.0	25.2	017-9UKE	81.2	30.6	260		optional
EA SER204-NLW	4 x 20	4.75	98.0	60.0	29.0	76.0	25.2	017-9UKE	81.2	30.6	45	blue	optional
EA SER204-BNLED	4 x 20	9.2	146.0	62.5	29.0	123.0	42.5	017-25KE	127.2	47.9	810		optional
EA SER404-HNLED	4 x 40	4.89	190.0	54.0	29.0	147.0	29.5	017-13UKE	151.2	34.4	440		optional
EA SER404-NLW	4 x 40	4.89	190.0	54.0	29.0	147.0	29.5	017-13UKE	151.2	34.4	75	blue	optional
8 line displays													
EA SER308-NLED	8 x 30	4.2 bold	180.0	65.0	29.0	134.0	40.2	017-10UKE	137.2	44.4	300		
EA SER408-NLED	8 x 40	4.2	180.0	65.0	29.0	134.0	40.2	017-10UKE	137.2	44.4	300		
16 line displays													
EA SER3016-NLED	16 x 30	3.6 bold	144.0	104.0	29.0	114.0	64.0	---	-	-	700		
EA SER4016-NLED	16 x 40	3.6	144.0	104.0	29.0	114.0	64.0	---	-	-	700		

Dimensions in mm
Current in mA



CAUTION!
Use ESD precautionary procedures
Electrostatic sensitive components

ELECTRONIC ASSEMBLY GmbH
Zeppelinstraße 19
D-82205 Gilching
Germany

Fon: +49 (0)8105-778090
Fax: +49 (0)8105-778099
e-Mail: info@lcd-module.de
Web: www.lcd-module.de

DISPLAY ELECTRONIC ASSEMBLY VISIONS

ELECTRONIC ASSEMBLY new display design