DISPLAY ELECTRONIC ASSEMBLY VISIONS

ELECTRONIC ASSEMBLY new display design

Zeppelinstrasse 19 D-82205 Gilching Fon +49-8105-778090 info@lcd-module.de http://www.lcd-module.de

06.2021

OLED - 128x32 dots

Incl. controller SSD1305Z





Features

- 2.22” Low-Power OLED
- -40..+80°C ($T_{op.}$)
- 128x32 dots
- Incl. controller SSD1305Z
- SPI, I²C, 8-Bit Interface
- Fast response time (10µs) even at -40°C
- ZIFF connection

Ordering code

OLED 2.22” - 128x32 dots, SSD1305Z yellow	**EA W128032-XALG**

Accessory

ZIFF connector 24 pins, 0.5mm pitch, top contact	**EA WF050-24T**
USB-Testboard	**EA 9781-2USB**

Zeppelinstrasse 19 D-82205 Gilching Fon +49-8105-778090 info@lcd-module.de http://www.lcd-module.de

Content

1.General Specification

2.Contour Drawing & Block Diagram

3.Interface Pin Function

4.Absolute Maximum Ratings

5.Electrical Characteristics

6.Optical Characteristics

7.OLED Lifetime

8.Reliability

9.Inspection specification

10.Precautions in use of OLED Modules

11. Initialization example

12. Application example

Printing and typographical errors reserved. ELECTRONIC ASSEMBLY reserves the right to change specification without prior note

Zeppelinstrasse 19 D-82205 Gilching Fon +49-8105-778090 info@lcd-module.de http://www.lcd-module.de

1. General Specification

Item	Dimension	Unit
Dot Matrix	128 x 32 Dots	–
Module dimension	62.0 × 24.0 × 2.35	mm
Active Area	55.018 × 13.098	mm
Pixel Size	0.408 × 0.388	mm
Pixel Pitch	0.43 × 0.41	mm
Display Mode	Passive Matrix	
Display Color	Yellow	
Drive Duty	1/32 Duty	
IC	SSD1305Z	

Printing and typographical errors reserved. ELECTRONIC ASSEMBLY reserves the right to change specification without prior note

Zeppelinstrasse 19 D-82205 Gilching Fon +49-8105-778090 info@lcd-module.de http://www.lcd-module.de

2. Contour Drawing & Block Diagram

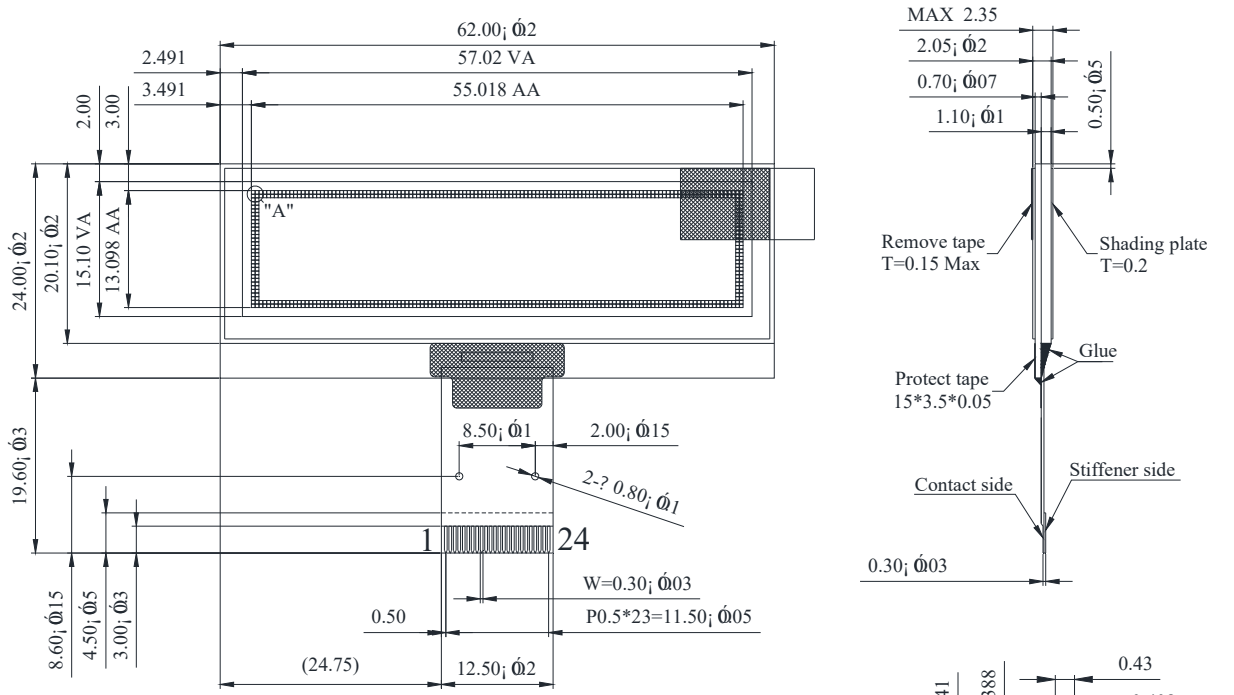

PIN NO.	SYMBOL
1	N.C.(GND)
2	VLSS
3	VSS
4	N.C.
5	VDD
6	BS1
7	BS2
8	CS#
9	RES#
10	D/C#
11	R/W#
12	E/RD#
13	D0
14	D1
15	D2
16	D3
17	D4
18	D5
19	D6
20	D7
21	IREF
22	VCOMH
23	VCC
24	N.C.(GND)

The non-specified tolerance of dimension is ±0.3mm.

Printing and typographical errors reserved. ELECTRONIC ASSEMBLY reserves the right to change specification without prior note

Zeppelinstrasse 19 D-82205 Gilching Fon +49-8105-778090 info@lcd-module.de http://www.lcd-module.de

FUNCTION BLOCK DIAGRAM

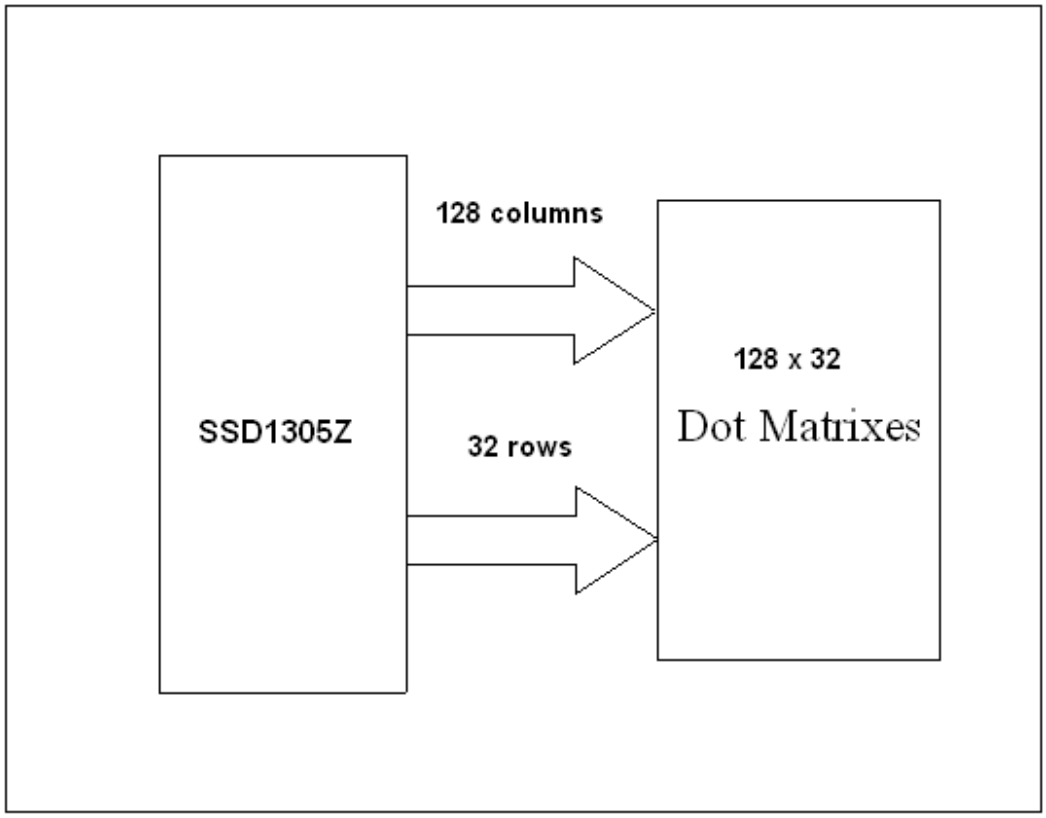

Printing and typographical errors reserved. ELECTRONIC ASSEMBLY reserves the right to change specification without prior note

Zeppelinstrasse 19 D-82205 Gilching Fon +49-8105-778090 info@lcd-module.de http://www.lcd-module.de

3. Interface Pin Function

<table>
<tr><th>No.</th><th>Symbol</th><th>Function</th></tr>
<tr><td>1</td><td>N.C.(GND)</td><td>No connection</td></tr>
<tr><td>2</td><td>VLSS</td><td>This is an analog ground pin. It should be connected to VSS externally.</td></tr>
<tr><td>3</td><td>VSS</td><td>Ground.</td></tr>
<tr><td>4</td><td>N.C.</td><td>No connection</td></tr>
<tr><td>5</td><td>VDD</td><td>Power supply pin for core logic operation</td></tr>
<tr><td>6</td><td>BS1</td><td rowspan="2">Communicating Protocol Select
These pins are MCU interface selection input. See the following table:
<table>
<tr><td></td><td>68XX-parallel</td><td>80XX-parallel</td><td>Serial</td><td>I2C</td></tr>
<tr><td>BS1</td><td>0</td><td>1</td><td>0</td><td>1</td></tr>
<tr><td>BS2</td><td>1</td><td>1</td><td>0</td><td>0</td></tr>
</table></td></tr>
<tr><td>7</td><td>BS2</td></tr>
<tr><td>8</td><td>CS#</td><td>This pin is the chip select input. (active LOW)</td></tr>
<tr><td>9</td><td>RES#</td><td>This pin is reset signal input. When the pin is LOW, initialization of the chip is executed.
Keep this pin HIGH (i.e. connect to VDDIO) during normal operation.</td></tr>
<tr><td>10</td><td>D/C#</td><td>This is Data/Command control pin. When it is pulled HIGH (i.e. connect to VDDIO), the data at D[7:0] is treated as data. When it is pulled LOW, the data at D[7:0] will be transferred to the command register.
In I2C mode, this pin acts as SA0 for slave address selection.</td></tr>
<tr><td>11</td><td>R/W#</td><td>This is read / write control input pin connecting to the MCU interface.
When interfacing to a 6800-series microprocessor, this pin will be used as Read/Write (R/W#) selection input. Read mode will be carried out when this pin is pulled HIGH (i.e. connect to VDDIO) and write mode when LOW. When 8080 interface mode is selected, this pin will be the Write (WR#) input. Data write operation is initiated when this pin is pulled LOW and the chip is selected.
When serial interface is selected, this pin must be connected to VSS.</td></tr>
<tr><td>12</td><td>E/RD#</td><td>When interfacing to a 6800-series microprocessor, this pin will be used as the Enable (E) signal. Read/write operation is initiated when this pin is pulled HIGH (i.e. connect to VDDIO)
and the chip is selected.
When connecting to an 8080-microprocessor, this pin receives the Read (RD#) signal. Read operation is initiated when this pin is pulled LOW and the chip is selected.
When serial interface is selected, this pin must be connected to VSS.</td></tr>
<tr><td>13</td><td>D0</td><td rowspan="2">These are 8-bit bi-directional data bus to be connected to the microprocessor’s data bus.</td></tr>
<tr><td>14</td><td>D1</td></tr>
</table>

Printing and typographical errors reserved. ELECTRONIC ASSEMBLY reserves the right to change specification without prior note

Zeppelinstrasse 19 D-82205 Gilching Fon +49-8105-778090 info@lcd-module.de http://www.lcd-module.de

15	D2	When serial interface mode is selected, D0 will be the serial clock input: SCLK; D1 will be the serial data input: SDIN and D2 should be left opened. When I2C mode is selected, D2, D1 should be tied together and serve as SDAout, SDAin in application and D0 is the serial clock input, SCL.
16	D3	
17	D4	
18	D5	
19	D6	
20	D7	
21	IREF	This is segment output current reference pin. A resistor should be connected between this pin and VSS to maintain the IREF current at 10uA.
22	VCOMH	The pin for COM signal deselected voltage level. A capacitor should be connected between this pin and VSS.
23	VCC	Power supply for panel driving voltage. This is also the most positive power voltage supply pin.
24	N.C.(GND)	No connection

Printing and typographical errors reserved. ELECTRONIC ASSEMBLY reserves the right to change specification without prior note

Zeppelinstrasse 19 D-82205 Gilching Fon +49-8105-778090 info@lcd-module.de http://www.lcd-module.de

4. Absolute Maximum Ratings

Parameter	Symbol	Min	Max	Unit	Notes
Supply Voltage for Logic	VDD	-0.3	4	V	1, 2
Supply Voltage for Display	VCC	0	15	V	1, 2
Operating Temperature	TOP	-40	+80	°C	-
Storage Temperature	TSTG	-40	+80	°C	-

Note 1: All the above voltages are on the basis of “VSS = 0V”.
Note 2: When this module is used beyond the above absolute maximum ratings, permanent breakage of the module may occur. Also, for normal operations, it is desirable to use this module under the conditions according to Section 6 ‘’Electrical Characteristics’’. If this module is used beyond these conditions, malfunctioning of the module can occur and the reliability of the module may deteriorate

Printing and typographical errors reserved. ELECTRONIC ASSEMBLY reserves the right to change specification without prior note

Zeppelinstrasse 19 D-82205 Gilching Fon +49-8105-778090 info@lcd-module.de http://www.lcd-module.de

5. Electrical Characteristics

Item	Symbol	Condition	Min	Typ	Max	Unit
Supply Voltage for Logic	VDD	–	2.8	3.0	3.3	V
Supply Voltage for Display	VCC	–	10	12	15	V
High Level Input	VIH	–	0.8×VDD	–	VDD	V
Low Level Input	VIL	–	0	–	0.2×VDD	V
High Level Output	VOH	–	0.9×VDD	–	VDD	V
Low Level Output	VOL	–	0	–	0.1×VDD	V
Supply Current	ICC	VCC=12.0V	10	12	14	mA

Printing and typographical errors reserved. ELECTRONIC ASSEMBLY reserves the right to change specification without prior note

Zeppelinstrasse 19 D-82205 Gilching Fon +49-8105-778090 info@lcd-module.de http://www.lcd-module.de

6. Optical Characteristics

Item	Symbol	Condition	Min	Typ	Max	Unit
View Angle	(V)θ		160			deg
	(H)φ		160			deg
Contrast Ratio	CR	Dark	2000:1		—	—
Response Time	T rise	—		10		µs
	T fall	—		10		µs
Display with 50% check Board Brightness			100	120		nits
CIEx(Yellow)		(CIE1931)	0.45	0.47	0.49	
CIEy(Yellow)		(CIE1931)	0.48	0.50	0.52	

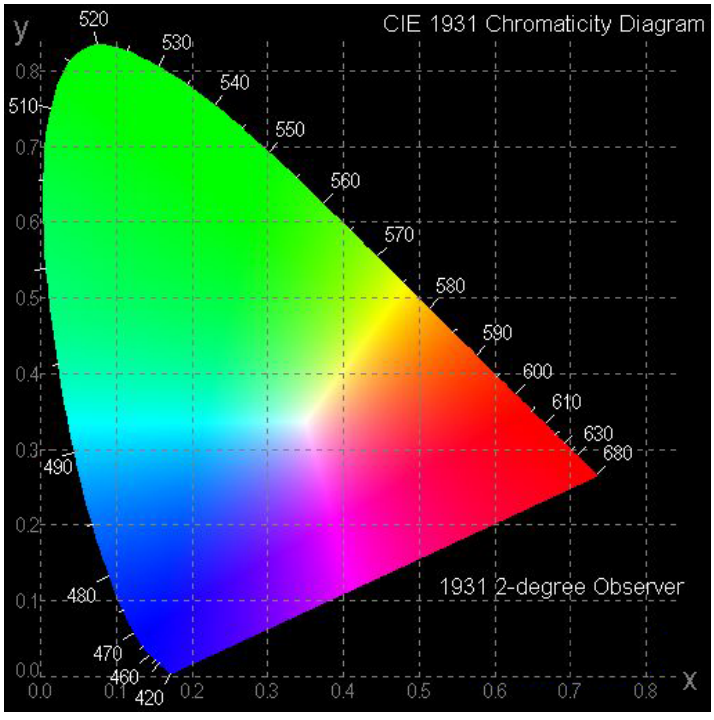

Printing and typographical errors reserved. ELECTRONIC ASSEMBLY reserves the right to change specification without prior note

Zeppelinstrasse 19 D-82205 Gilching Fon +49-8105-778090 info@lcd-module.de http://www.lcd-module.de

7. OLED Lifetime

ITEM	Conditions	Min	Typ	Remark
Operating Life Time	Ta=25℃ / Initial 50% check board brightness Typical Value	50,000 Hrs	–	Note

Notes:
1. Life time is defined the amount of time when the luminance has decayed to <50% of the initial value.
2. This analysis method uses life data obtained under accelerated conditions to extrapolate an estimated probability density function (*pdf*) for the product under normal use conditions.
3. Screen saving mode will extend OLED lifetime.

Printing and typographical errors reserved. ELECTRONIC ASSEMBLY reserves the right to change specification without prior note

Zeppelinstrasse 19 D-82205 Gilching Fon +49-8105-778090 info@lcd-module.de http://www.lcd-module.de

8. Reliability

Content of Reliability Test

Environmental Test			
Test Item	**Content of Test**	**Test Condition**	**Applicable Standard**
High Temperature storage	Endurance test applying the high storage temperature for a long time.	80℃ 240hrs	——
Low Temperature storage	Endurance test applying the low storage temperature for a long time.	-40℃ 240hrs	——
High Temperature Operation	Endurance test applying the electric stress (Voltage & Current) and the thermal stress to the element for a long time.	80℃ 240hrs	——
Low Temperature Operation	Endurance test applying the electric stress under low temperature for a long time.	-40℃ 240hrs	——
High Temperature/ Humidity Storage	Endurance test applying the high temperature and high humidity storage for a long time.	60℃,90%RH 240hrs	——
Temperature Cycle	Endurance test applying the low and high temperature cycle. -40℃ 25℃ 80℃ 30min 5min 30min 1 cycle	-40℃/80℃ 100 cycles	——
Mechanical Test			
Vibration test	Endurance test applying the vibration during transportation and using.	10~22Hz→1.5mmp-p 22~500Hz→1.5G Total 0.5hr	——
Shock test	Constructional and mechanical endurance test applying the shock during transportation.	50G Half sin wave 11 ms 3 times of each direction	——
Atmospheric pressure test	Endurance test applying the atmospheric pressure during transportation by air.	115mbar 40hrs	——
Others			
Static electricity test	Endurance test applying the electric stress to the terminal.	VS=±600V(contact), ±800v(air), RS=330Ω CS=150pF 10 times	——

*** Supply voltage for OLED system =Operating voltage at 25℃

Printing and typographical errors reserved. ELECTRONIC ASSEMBLY reserves the right to change specification without prior note

Test and measurement conditions

1. All measurements shall not be started until the specimens attain to temperature stability. After the completion of the described reliability test, the samples were left at room temperature for 2 hrs prior to conducting the failure test at 23±5°C; 55±15% RH.
2. All-pixels-on is used as operation test pattern.
3. The degradation of Polarizer are ignored for High Temperature storage, High Temperature/ Humidity Storage, Temperature Cycle

Evaluation criteria

1. The function test is OK.
2. No observable defects.
3. Luminance: > 50% of initial value.
4. Current consumption: within ± 50% of initial value.

APPENDIX:

RESIDUE IMAGE

Because the pixels are lighted in different time, the luminance of active pixels may reduce or differ from inactive pixels. Therefore, the residue image will occur. To avoid the residue image, every pixel needs to be lighted up uniformly.

Printing and typographical errors reserved. ELECTRONIC ASSEMBLY reserves the right to change specification without prior note

Zeppelinstrasse 19 D-82205 Gilching Fon +49-8105-778090 info@lcd-module.de http://www.lcd-module.de

9. Inspection specification

<table>
<tr><th>NO</th><th>Item</th><th>Criterion</th><th>AQL</th></tr>
<tr><td>01</td><td>Electrical Testing</td><td>1.1 Missing vertical, horizontal segment, segment contrast defect.
1.2 Missing character , dot or icon.
1.3 Display malfunction.
1.4 No function or no display.
1.5 Current consumption exceeds product specifications.
1.6 OLED viewing angle defect.
1.7 Mixed product types.
1.8 Contrast defect.</td><td>0.65</td></tr>
<tr><td>02</td><td>Black or white spots on OLED (display only)</td><td>2.1 White and black spots on display ≦0.25mm, no more than three white or black spots present.
2.2 Densely spaced: No more than two spots or lines within 3mm.</td><td>2.5</td></tr>
<tr><td>03</td><td>OLED black spots, white spots, contamination (non-display)</td><td>3.1 Round type : As following drawing
Φ=(x + y) / 2
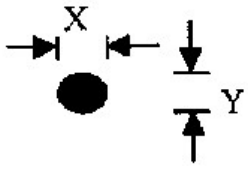

<table>
<tr><th>SIZE</th><th>Acceptable Q TY</th></tr>
<tr><td>Φ≦0.10</td><td>Accept no dense</td></tr>
<tr><td>0.10＜ Φ≦0.20</td><td>2</td></tr>
<tr><td>0.20＜ Φ≦0.25</td><td>1</td></tr>
<tr><td>0.25＜Φ</td><td>0</td></tr>
</table></td><td>2.5</td></tr>
<tr><td></td><td></td><td>3.2 Line type : (As following drawing)
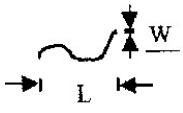

<table>
<tr><th>Length</th><th>Width</th><th>Acceptable Q TY</th></tr>
<tr><td>---</td><td>W≦0.02</td><td>Accept no dense</td></tr>
<tr><td>L≦3.0</td><td>0.02＜W≦0.03</td><td rowspan="2">2</td></tr>
<tr><td>L≦2.5</td><td>0.03＜W≦0.05</td></tr>
<tr><td>---</td><td>0.05＜W</td><td>As round type</td></tr>
</table></td><td>2.5</td></tr>
<tr><td>04</td><td>Polarizer bubbles</td><td><table>
<tr><th>Size Φ</th><th>Acceptable Q TY</th></tr>
<tr><td>Φ≦0.20</td><td>Accept no dense</td></tr>
<tr><td>0.20＜Φ≦0.50</td><td>3</td></tr>
<tr><td>0.50＜Φ≦1.00</td><td>2</td></tr>
</table></td><td>2.5</td></tr>
</table>

Printing and typographical errors reserved. ELECTRONIC ASSEMBLY reserves the right to change specification without prior note

<table>
<tr><td></td><td></td><td>If bubbles are visible, judge using black spot specifications, not easy to find, must check in specify direction.
<table>
<tr><td>1.00＜Φ</td><td>0</td></tr>
<tr><td>Total Q TY</td><td>3</td></tr>
</table></td><td></td></tr>
<tr><td>NO</td><td>Item</td><td>Criterion</td><td>AQL</td></tr>
<tr><td>05</td><td>Scratches</td><td>Follow NO.3 OLED black spots, white spots, contamination</td><td></td></tr>
<tr><td>06</td><td>Chipped glass</td><td>Symbols Define:
x: Chip length y: Chip width z: Chip thickness
k: Seal width t: Glass thickness a: OLED side length
L: Electrode pad length:

6.1 General glass chip :
6.1.1 Chip on panel surface and crack between panels:
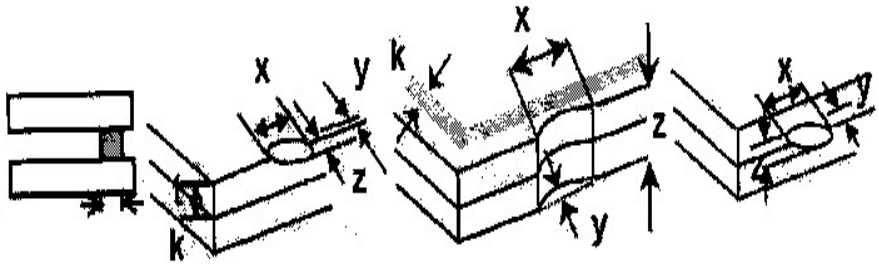

<table>
<tr><td>z: Chip thickness</td><td>y: Chip width</td><td>x: Chip length</td></tr>
<tr><td>Z≦1/2t</td><td>Not over viewing area</td><td>x≦1/8a</td></tr>
<tr><td>1/2t＜z≦2t</td><td>Not exceed 1/3k</td><td>x≦1/8a</td></tr>
</table>
⊙If there are 2 or more chips, x is total length of each chip.

6.1.2 Corner crack:
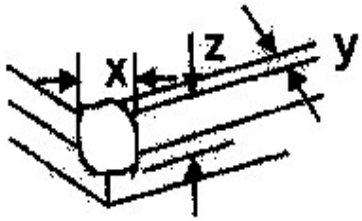

<table>
<tr><td>z: Chip thickness</td><td>y: Chip width</td><td>x: Chip length</td></tr>
<tr><td>Z≦1/2t</td><td>Not over viewing area</td><td>x≦1/8a</td></tr>
<tr><td>1/2t＜z≦2t</td><td>Not exceed 1/3k</td><td>x≦1/8a</td></tr>
</table>
⊙If there are 2 or more chips, x is the total length of each chip.</td><td>2.5</td></tr>
</table>

Printing and typographical errors reserved. ELECTRONIC ASSEMBLY reserves the right to change specification without prior note

<table>
<tr><th>NO</th><th>Item</th><th>Criterion</th><th>AQL</th></tr>
<tr><td>06</td><td>Glass crack</td><td>
Symbols :
x: Chip length y: Chip width z: Chip thickness
k: Seal width t: Glass thickness a: OLED side length
L: Electrode pad length
6.2 Protrusion over terminal :
6.2.1 Chip on electrode pad :
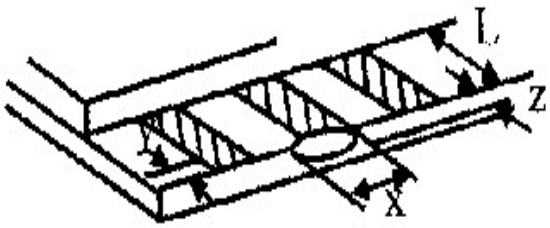

<table>
<tr><td>y: Chip width</td><td>x: Chip length</td><td>z: Chip thickness</td></tr>
<tr><td>y≦0.5mm</td><td>x≦1/8a</td><td>0 ＜ z ≦ t</td></tr>
</table>
6.2.2 Non-conductive portion:
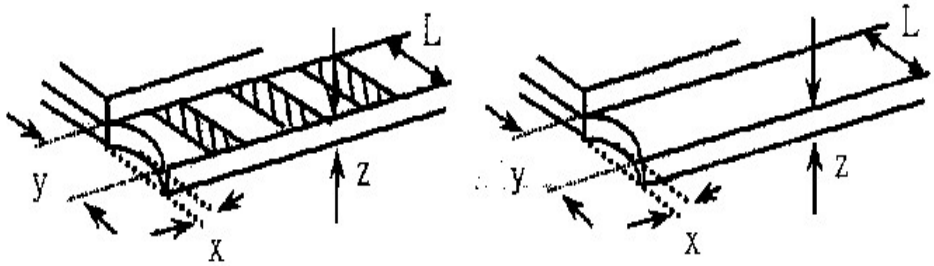

<table>
<tr><td>y: Chip width</td><td>x: Chip length</td><td>z: Chip thickness</td></tr>
<tr><td>y≦ L</td><td>x≦1/8a</td><td>0 ＜ z ≦ t</td></tr>
</table>
⊙If the chipped area touches the ITO terminal, over 2/3 of the ITO must remain and be inspected according to electrode terminal specifications.
⊙If the product will be heat sealed by the customer, the alignment mark not be damaged.
6.2.3 Substrate protuberance and internal crack.
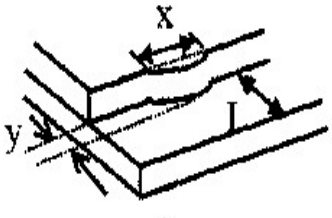

<table>
<tr><td>y: width</td><td>x: length</td></tr>
<tr><td>y≦1/3L</td><td>x ≦ a</td></tr>
</table>
</td><td>2.5</td></tr>
</table>

Printing and typographical errors reserved. ELECTRONIC ASSEMBLY reserves the right to change specification without prior note

Zeppelinstrasse 19 D-82205 Gilching Fon +49-8105-778090 info@lcd-module.de http://www.lcd-module.de

NO	Item	Criterion	AQL
07	Cracked glass	The OLED with extensive crack is not acceptable.	2.5
08	Backlight elements	8.1 Illumination source flickers when lit. 8.2 Spots or scratched that appear when lit must be judged. Using OLED spot, lines and contamination standards. 8.3 Backlight doesn't light or color wrong.	0.65 2.5 0.65
09	Bezel	9.1 Bezel may not have rust, be deformed or have fingerprints, stains or other contamination. 9.2 Bezel must comply with job specifications.	2.5 0.65
10	PCB、COB	10.1 COB seal may not have pinholes larger than 0.2mm or contamination. 10.2 COB seal surface may not have pinholes through to the IC. 10.3 The height of the COB should not exceed the height indicated in the assembly diagram. 10.4 There may not be more than 2mm of sealant outside the seal area on the PCB. And there should be no more than three places. 10.5 No oxidation or contamination PCB terminals. 10.6 Parts on PCB must be the same as on the production characteristic chart. There should be no wrong parts, missing parts or excess parts. 10.7 The jumper on the PCB should conform to the product characteristic chart. 10.8 If solder gets on bezel tab pads, OLED pad, zebra pad or screw hold pad, make sure it is smoothed down.	2.5 2.5 0.65 2.5 2.5 0.65 0.65 2.5
11	Soldering	11.1 No un-melted solder paste may be present on the PCB. 11.2 No cold solder joints, missing solder connections, oxidation or icicle. 11.3 No residue or solder balls on PCB. 11.4 No short circuits in components on PCB.	2.5 2.5 2.5 0.65

Printing and typographical errors reserved. ELECTRONIC ASSEMBLY reserves the right to change specification without prior note

Zeppelinstrasse 19 D-82205 Gilching Fon +49-8105-778090 info@lcd-module.de http://www.lcd-module.de

NO	Item	Criterion	AQL
12	General appearance	12.1 No oxidation, contamination, curves or, bends on interface Pin (OLB) of TCP. 12.2 No cracks on interface pin (OLB) of TCP. 12.3 No contamination, solder residue or solder balls on product. 12.4 The IC on the TCP may not be damaged, circuits. 12.5 The uppermost edge of the protective strip on the interface pin must be present or look as if it cause the interface pin to sever. 12.6 The residual rosin or tin oil of soldering (component or chip component) is not burned into brown or black color. 12.7 Sealant on top of the ITO circuit has not hardened. 12.8 Pin type must match type in specification sheet. 12.9 OLED pin loose or missing pins. 12.10 Product packaging must the same as specified on packaging specification sheet. 12.11 Product dimension and structure must conform to product specification sheet.	2.5 0.65 2.5 2.5 2.5 2.5 2.5 0.65 0.65 0.65 0.65

Printing and typographical errors reserved. ELECTRONIC ASSEMBLY reserves the right to change specification without prior note

Zeppelinstrasse 19 D-82205 Gilching Fon +49-8105-778090 info@lcd-module.de http://www.lcd-module.de

Check Item	Classification	Criteria
No Display	Major	
Missing Line	Major	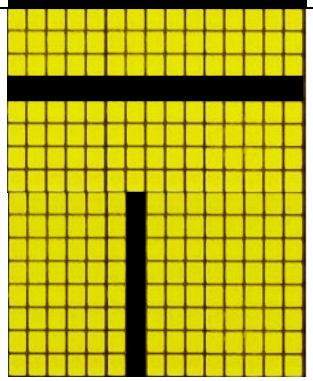
Pixel Short	Major	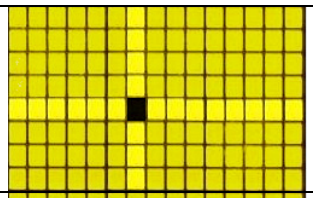
Darker Short	Major	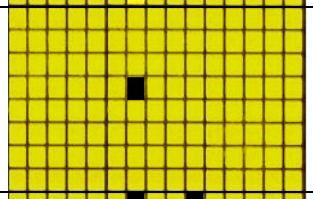
Wrong Display	Major	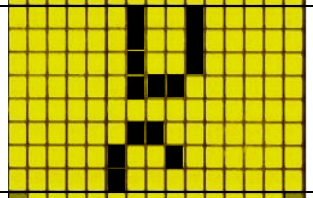
Un-uniform B/A x 100% < 70% A/C x 100% < 70%	Major	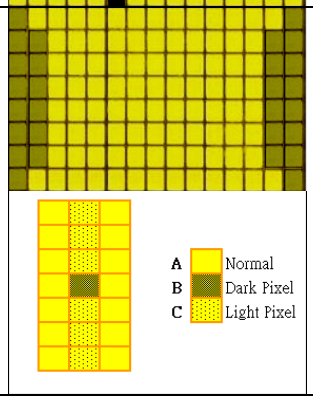

Printing and typographical errors reserved. ELECTRONIC ASSEMBLY reserves the right to change specification without prior note

Zeppelinstrasse 19 D-82205 Gilching Fon +49-8105-778090 info@lcd-module.de http://www.lcd-module.de

10. Precautions in use of OLED Modules

Modules

(1)Avoid applying excessive shocks to module or making any alterations or modifications to it.
(2)Don't make extra holes on the printed circuit board, modify its shape or change the components of OLED display module.
(3)Don't disassemble the OLED display module.
(4)Don't operate it above the absolute maximum rating.
(5)Don't drop, bend or twist OLED display module.
(6)Soldering: only to the I/O terminals.
(7)Storage: please storage in anti-static electricity container and clean environment.
(8)It's pretty common to use "Screen Saver" to extend the lifetime and Don't use fix information for long time in real application.
(9)Don't use fixed information in OLED panel for long time, that will extend "screen burn" effect time..
(10)ELECTRONIC ASSEMBLY GmbH has the right to change the passive components, including R2and R3 adjust resistors. (Resistors, capacitors and other passive components will have different appearance and color caused by the different supplier.)
(11)ELECTRONIC ASSEMBLY GmbH have the right to change the PCB Rev. (In order to satisfy the supplying stability, management optimization and the best product performance...etc, under the premise of not affecting the electrical characteristics and external dimensions, ELECTRONIC ASSEMBLY GmbH have the right to modify the version.)

10.1. Handling Precautions

(1) Since the display panel is being made of glass, do not apply mechanical impacts such us dropping from a high position.
(2) If the display panel is broken by some accident and the internal organic substance leaks out, be careful not to inhale nor lick the organic substance.
(3) If pressure is applied to the display surface or its neighborhood of the OLED display module, the cell structure may be damaged and be careful not to apply pressure to these sections.
(4) The polarizer covering the surface of the OLED display module is soft and easily scratched. Please be careful when handling the OLED display module.
(5) When the surface of the polarizer of the OLED display module has soil, clean the surface. It takes advantage of by using following adhesion tape.
* Scotch Mending Tape No. 810 or an equivalent
Never try to breathe upon the soiled surface nor wipe the surface using cloth containing solvent such as ethyl alcohol, since the surface of the polarizer will become cloudy.
Also, pay attention that the following liquid and solvent may spoil the polarizer:
* Water
* Ketone
* Aromatic Solvents

Printing and typographical errors reserved. ELECTRONIC ASSEMBLY reserves the right to change specification without prior note

(6) Hold OLED display module very carefully when placing OLED display module into the System housing. Do not apply excessive stress or pressure to OLED display module. And, do not over bend the film with electrode pattern layouts.
These stresses will influence the display performance. Also, secure sufficient rigidity for the outer cases.

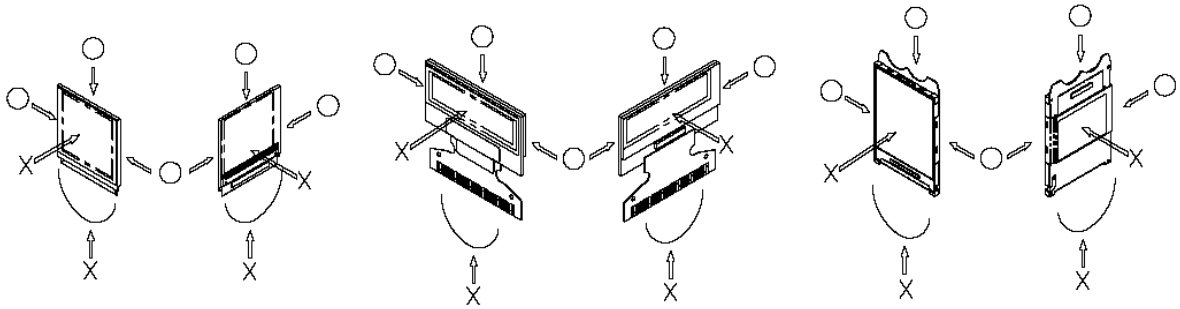

(7) Do not apply stress to the LSI chips and the surrounding molded sections.
(8) Do not disassemble nor modify the OLED display module.
(9) Do not apply input signals while the logic power is off.
(10) Pay sufficient attention to the working environments when handing OLED display modules to prevent occurrence of element breakage accidents by static electricity.
* Be sure to make human body grounding when handling OLED display modules.
* Be sure to ground tools to use or assembly such as soldering irons.
* To suppress generation of static electricity, avoid carrying out assembly work under dry environments.
* Protective film is being applied to the surface of the display panel of the OLED display module. Be careful since static electricity may be generated when exfoliating the protectivefilm.
(11) Protection film is being applied to the surface of the display panel and removes the protection film before assembling it. At this time, if the OLED display module has been stored for a long period of time, residue adhesive material of the protection film may remain on the surface of the display panel after removed of the film. In such case, remove the residue material by the method introduced in the above Section 5.
(12) If electric current is applied when the OLED display module is being dewed or when it is placed under high humidity environments, the electrodes may be corroded and be careful to avoid the above.

10.2. Storage Precautions

(1) When storing OLED display modules, put them in static electricity preventive bags avoiding exposure to direct sun light nor to lights of fluorescent lamps. and, also, avoiding high temperature and high humidity environment or low temperature (less than 0°C) environments.
(We recommend you to store these modules in the packaged state when they were shipped from ELECTRONIC ASSEMBLY GmbH.
At that time, be careful not to let water drops adhere to the packages or bags nor let dewing occur with them.
(2) If electric current is applied when water drops are adhering to the surface of the OLED

display module, when the OLED display module is being dewed or when it is placed under high humidity environments, the electrodes may be corroded and be careful about the above.

10.3. Designing Precautions

(1) The absolute maximum ratings are the ratings which cannot be exceeded for OLED display module, and if these values are exceeded, panel damage may be happen.
(2) To prevent occurrence of malfunctioning by noise, pay attention to satisfy the VIL and VIH specifications and, at the same time, to make the signal line cable as short as possible.
(3) We recommend you to install excess current preventive unit (fuses, etc.) to the power circuit (VDD). (Recommend value: 0.5A)
(4) Pay sufficient attention to avoid occurrence of mutual noise interference with the neighboring devices.
(5) As for EMI, take necessary measures on the equipment side basically.
(6) When fastening the OLED display module, fasten the external plastic housing section.
(7) If power supply to the OLED display module is forcibly shut down by such errors as taking out the main battery while the OLED display panel is in operation, we cannot guarantee the quality of this OLED display module.
* Connection (contact) to any other potential than the above may lead to rupture of the IC.

10.4. Precautions when disposing of the OLED display modules

1) Request the qualified companies to handle industrial wastes when disposing of the OLED display modules. Or, when burning them, be sure to observe the environmental and hygienic laws and regulations.

10.5. Other Precautions

(1) When an OLED display module is operated for a long of time with fixed pattern may remain as an after image or slight contrast deviation may occur.
Nonetheless, if the operation is interrupted and left unused for a while, normal state can be restored. Also, there will be no problem in the reliability of the module.
(2) To protect OLED display modules from performance drops by static electricity rapture, etc., do not touch the following sections whenever possible while handling the OLED display modules.
* Pins and electrodes
* Pattern layouts such as the TCP & FPC
(3) With this OLED display module, the OLED driver is being exposed. Generally speaking, semiconductor elements change their characteristics when light is radiated according to the principle of the solar battery. Consequently, if this OLED driver is exposed to light, malfunctioning may occur.
* Design the product and installation method so that the OLED driver may be shielded from light in actual usage.
* Design the product and installation method so that the OLED driver may be shielded from light during the inspection processes.
(4) Although this OLED display module stores the operation state data by the commands and the

indication data, when excessive external noise, etc. enters into the module, the internal status may be changed. It therefore is necessary to take appropriate measures to suppress noise generation or to protect from influences of noise on the system design.

(5) We recommend you to construct its software to make periodical refreshment of the operation statuses (re-setting of the commands and re-transference of the display data) to cope with catastrophic noise.

(6) Resistors, capacitors and other passive components will have different appearance and color caused by the different supplier.

(7) Our company will has the right to upgrade and modify the product function.

(8) The limitation of FPC bending

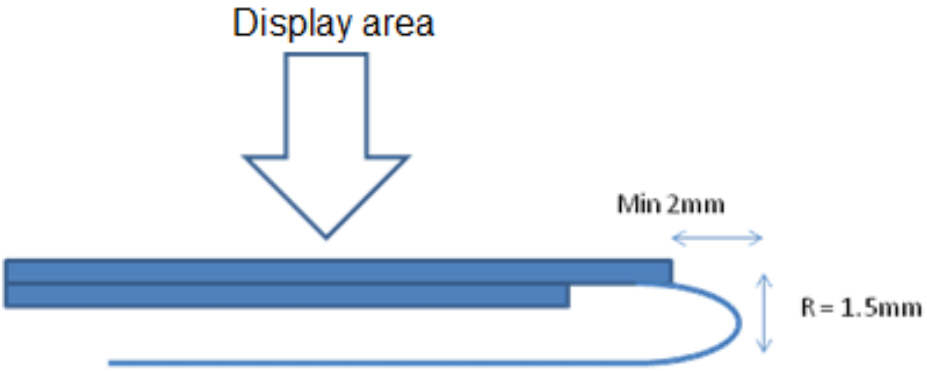

Printing and typographical errors reserved. ELECTRONIC ASSEMBLY reserves the right to change specification without prior note

11. Initialization example

```
/*****************************************************************************
Global variables
*****************************************************************************/

uint8_t buf[20];          //SPI buffer

/*****************************************************************************
Function name: initW128032
Description: Initialization of the display
*****************************************************************************/

void initW128032(void){
      uint16_t i = 0;

    PORT5.PODR.BIT.B5 = 0;        //Reset pin low
    ms_delay(100);              //100ms delay
    PORT5.PODR.BIT.B5 = 1;        //Reset pin high
    ms_delay(100);              //100ms delay

    buf[i++] = 0x40 + 0;        //set display start line to 0



    buf[i++] = 0xA6;            //set normal display mode

    buf[i++] = 0x81;  buf[i++] = 0x7F;  //Set contrast to 0x7F (default)
    buf[i++] = 0xD5;  buf[i++] = 0x40;  //clock divider/oscillator frequency
    buf[i++] = 0xD9;  buf[i++] = 0x44;  //pre-charge Period
      buf[i++] = 0xA8;    buf[i++] = 0x1F;  //Set Multiplex Ratio to 32-1

    buf[i++] = 0xA1;  //set segment remap (col. 131 to SEG0)
    buf[i++] = 0xC8;  //set COM output scan direction (COM[n~1] to COM0)
    buf[i++] = 0xAF;  //Display on


    waitforemptybuffer();       //Waits until SPI buffer is empty


    PORT5.PODR.BIT.B4 = 0;        //D/C# pin low
    R_RSPI0_Send(buf,i);        //send initialization buffer via SPI

}
```

```
/*****************************************************************************
Function name: initWindow
Description: Initialization of the window in horizontal addressing mode
*****************************************************************************/

void initWindow(uint8_t startcol, uint8_t stopcol, uint8_t startpage, uint8_t stoppage){

      uint16_t i = 0;

    buf[i++] = 0x20;          //set memory addressing mode ...
    buf[i++] = 0x00;          //... to horizontal addressing mode

    buf[i++] = 0x7F;          //set display start line to 63

    buf[i++] = 0x21;          //set column address
    buf[i++] = 4+startcol;    //start address
    buf[i++] = 4+stopcol;     //end address

    buf[i++] = 0x22;          //set page address
    buf[i++] = startpage;     //start page
    buf[i++] = stoppage;      //stop page

    waitforemptybuffer();     //waits until SPI buffer is empty
    PORT5.PODR.BIT.B4 = 0;        //set D/C# pin low

    R_RSPI0_Send(buf,i);      //send data buffer via SPI
}

/*****************************************************************************
Function name: sendDataW128032
Description: Sends data to the display (Initialization of the window before sending data to
the display -> initWindow()
*****************************************************************************/

void sendDataW128032 (const uint8_t *tx_buf, uint16_t tx_num){
    waitforemptybuffer();         //Waits until SPI buffer is empty
    PORT5.PODR.BIT.B4 = 1;            //D/C# pin high
    R_RSPI0_Send(tx_buf,tx_num);      //send data buffer
}
```

12. Application example

