# USB Connectors
# USB 2.0 Sockets Type A

**SMT, Shell DIP**

econ connect

## SPECIFICATION:

| | |
|---|---|
| Operating Current (Nom.): | 1.5 A |
| Operating Temperature: | -25°C to 115°C |
| Insulation Resistance (Min.): | 1000 MΩ |
| Contact Resistance (Max.): | 30 mΩ |
| Dielectric Strength: | 500 Vac |
| Insertion Force (Max.): | 35 N |
| Extraction Force: | 10 N |

SMT



## MATERIAL:

| | |
|---|---|
| Material (Terminal): | brass, tin plated |
| Material (Housing): | SPCC, nickel plated |
| Flammability Class: | UL 94 V-0 |
| Material (Insulation): | LCP |
| Material (Contact Area): | brass, gold plated |

## HANDLING:

| | |
|---|---|
| Packaging: | tray |

## TOLERANCE:

| | |
|---|---|
| .X: | ± 0.25 |
| .XX: | ± 0.20 |

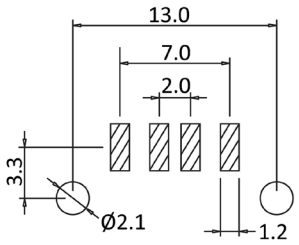


Recommended PCB Layout

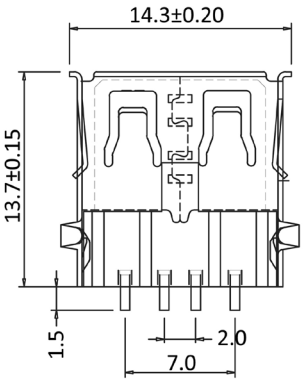


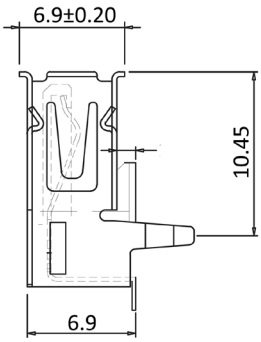


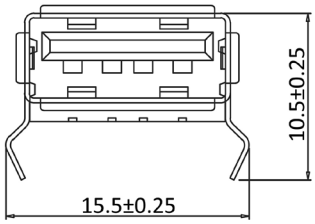


## Order Information

| Identifier: |
|---|
| U2BU1ASMD |
| SMT Socket type A angled |