RG160AC Series Flatpak

220x220x56mm



- AC radial blower with external rotor shaded-pole motor. Impedance protected against overloading.
- Spiral housing and blower of fiber-glass reinforced plastic. Housing base of galvanised steel plate.
- Radial air exhaust through housing port. Rotational direction CCW looking at rotor.
- Electrical connection via leads AWG 18. Stripped and tinned ends.
- UL, CSA, VDE approvals on some models, please contact application engineering.

Part Number	Curve	CFM @ 0	VAC	Hertz	Power (W)	dBA	Max Amb. Temp C	Bearing Type	Features	Wgt. (lbs)
RG160-28/56S	1	118.9	230	50	47	69	70	Ball	Leads	3.31
RG160-28/06S	2	131.3	115	60	50	69	80	Ball	Leads	3.31

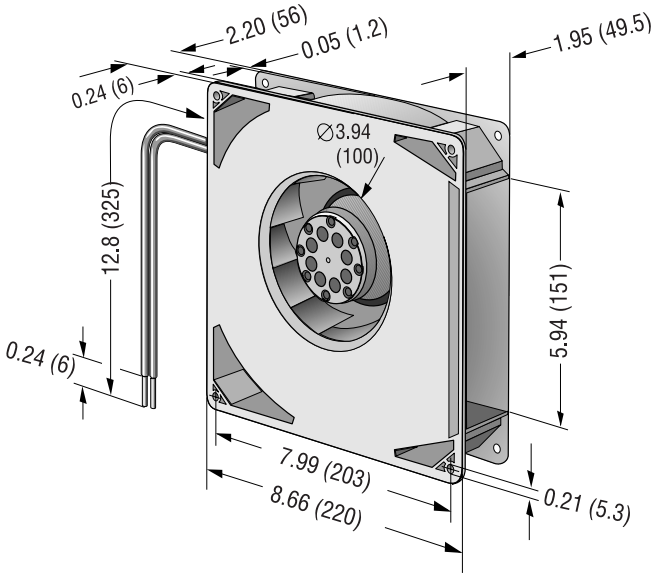

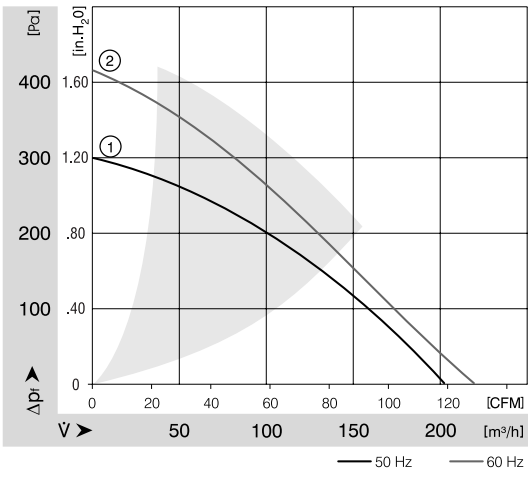

ebmpapst

e-mail: sales@us.ebmpapst.com · TEL: 860-674-1515 · FAX: 860-674-8536
ebm-papst Inc., 100 Hyde Road, Farmington, CT 06034 USA
ebm-papst Inc., 2006 © ebm-papst Inc. reserves the right to change any specifications or data without notice

Mouser Electronics

Authorized Distributor

Click to View Pricing, Inventory, Delivery & Lifecycle Information:

ebm-papst:
RG160-28/06S RG160-28/56S