9950

AC axial compact fan



ebm-papst St. Georgen GmbH & Co. KG
Hermann-Papst-Str. 1
D-78112 St. Georgen
Phone +49 (0) 7724 81-0
Fax +49 (0) 7724 81-1309
info2@de.ebmpapst.com
www.ebmpapst.com

Nominal data

Type	9950

Phase		1~
Nominal voltage	VAC	230
Frequency	Hz	50
Speed	min^{-1}	2450
Power input	W	14.0
Min. ambient temperature	°C	-20
Max. ambient temperature	°C	70
Air flow	m^3/h	117
Sound power level	B	5.0
Sound pressure level	dB(A)	37

ml = Max. load · me = Max. efficiency · fa = Running at free air · cs = Customer specs · cu = Customer unit
Subject to alterations

AC axial compact fan

Technical features

Mass	0.325 kg
Dimensions	119 x 119 x 25 mm
Material of impeller	Mineral-reinforced PA plastic
Housing material	Die-cast aluminium
Direction of air flow	Exhaust over struts
Direction of rotation	Left, looking at rotor
Bearing	Sintec sleeve bearing
Lifetime L10 at 40 °C	47500 h
Lifetime L10 at maximum temperature	22500 h
Connection line	2 flat connectors 2.8 x 0.5 mm Grounding lug for M4
Motor protection	Protected from overload using impedance protection
Approval	VDE, CSA, UL, CE

ebm-papst St. Georgen GmbH & Co. KG · Hermann-Papst-Str. 1 · D-78112 St. Georgen · Phone +49 (0) 7724 81-0 · Fax +49 (0) 7724 81-1309 · info2@de.ebmpapst.com · www.ebmpapst.com

AC axial compact fan

Product drawing

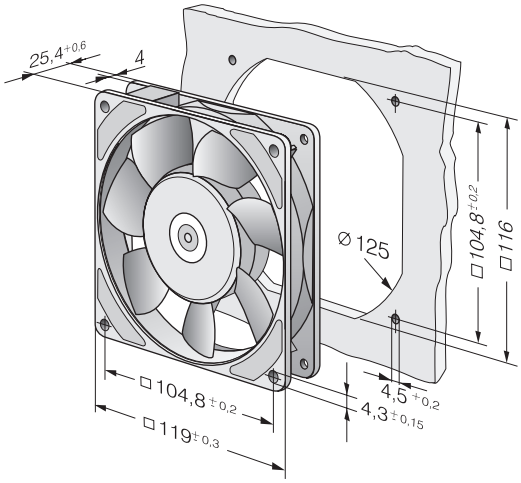

ebm-papst St. Georgen GmbH & Co. KG · Hermann-Papst-Str. 1 · D-78112 St. Georgen · Phone +49 (0) 7724 81-0 · Fax +49 (0) 7724 81-1309 · info2@de.ebmpapst.com · www.ebmpapst.com

AC axial compact fan

Charts: Air flow

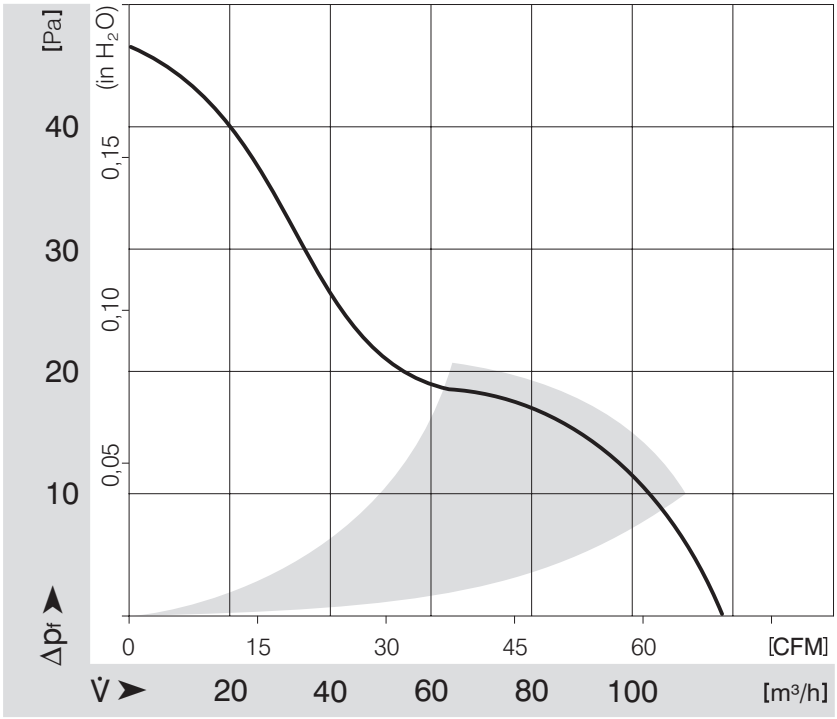

ebm-papst St. Georgen GmbH & Co. KG · Hermann-Papst-Str. 1 · D-78112 St. Georgen · Phone +49 (0) 7724 81-0 · Fax +49 (0) 7724 81-1309 · info2@de.ebmpapst.com · www.ebmpapst.com