8850 N

AC axial compact fan



ebm-papst St. Georgen GmbH & Co. KG
Hermann-Papst-Str. 1
D-78112 St. Georgen
Phone +49 (0) 7724 81-0
Fax +49 (0) 7724 81-1309
info2@de.ebmpapst.com
www.ebmpapst.com

Nominal data

Type	8850 N	
Phase		1~
Nominal voltage	VAC	230
Frequency	Hz	50
Speed	min^{-1}	2150
Power input	W	12.5
Min. ambient temperature	°C	-10
Max. ambient temperature	°C	70
Air flow	m^3/h	37
Sound power level	B	3.9
Sound pressure level	dB(A)	24

ml = Max. load · me = Max. efficiency · fa = Running at free air · cs = Customer specs · cu = Customer unit
Subject to alterations

Technical features

Mass	0.490 kg
Dimensions	80 x 80 x 38 mm
Material of impeller	Sheet steel, coated in black
Housing material	Die-cast aluminium
Direction of air flow	Exhaust over struts
Direction of rotation	Right, looking at rotor
Bearing	Sintec sleeve bearing
Lifetime L10 at 40 °C	52500 h
Lifetime L10 at maximum temperature	25000 h
Connection line	With 2 single strands AWG 18, TR 64 Grounding lug M4 x 8
Motor protection	Protected from overload using impedance protection
Approval	VDE, CSA, UL, CE

ebm-papst St. Georgen GmbH & Co. KG · Hermann-Papst-Str. 1 · D-78112 St. Georgen · Phone +49 (0) 7724 81-0 · Fax +49 (0) 7724 81-1309 · info2@de.ebmpapst.com · www.ebmpapst.com

AC axial compact fan

Product drawing

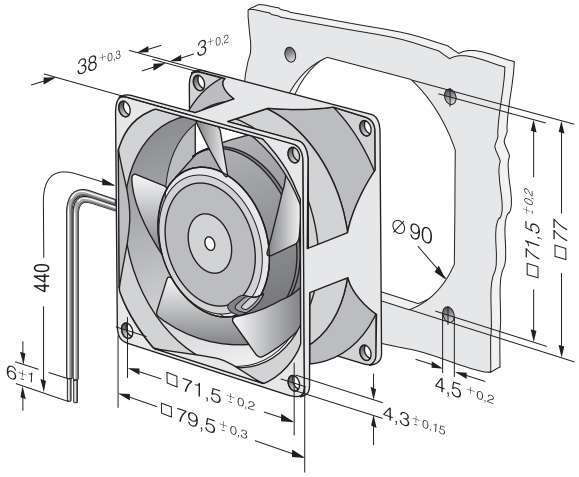

ebm-papst St. Georgen GmbH & Co. KG · Hermann-Papst-Str. 1 · D-78112 St. Georgen · Phone +49 (0) 7724 81-0 · Fax +49 (0) 7724 81-1309 · info2@de.ebmpapst.com · www.ebmpapst.com

AC axial compact fan

Charts: Air flow

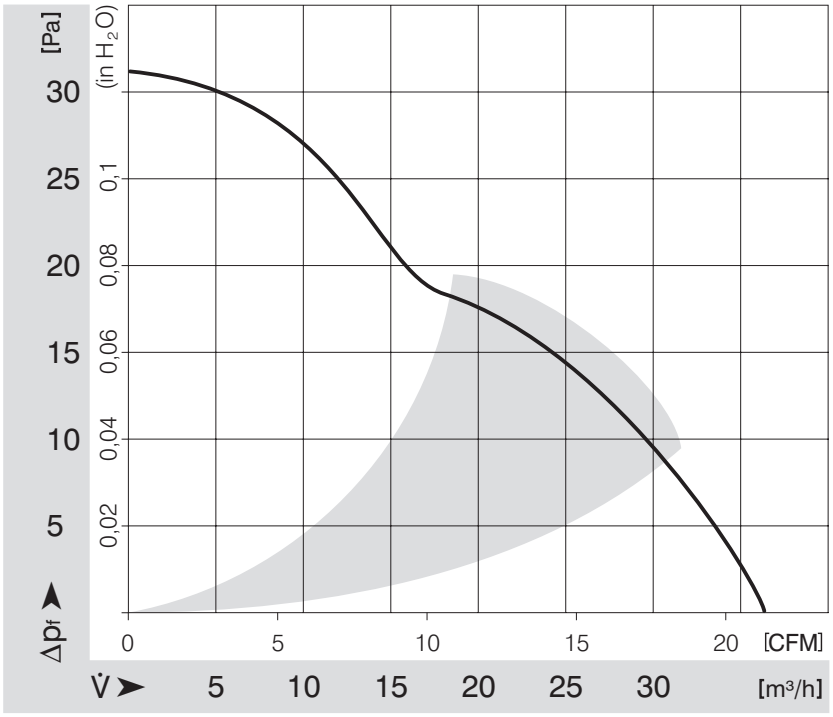

ebm-papst St. Georgen GmbH & Co. KG · Hermann-Papst-Str. 1 · D-78112 St. Georgen · Phone +49 (0) 7724 81-0 · Fax +49 (0) 7724 81-1309 · info2@de.ebmpapst.com · www.ebmpapst.com