6008 ES

AC axial compact fan



ebm-papst St. Georgen GmbH & Co. KG
Hermann-Papst-Str. 1
D-78112 St. Georgen
Phone +49 (0) 7724 81-0
Fax +49 (0) 7724 81-1309
info2@de.ebmpapst.com
www.ebmpapst.com

Nominal data

Type	6008 ES	
Phase		1~
Nominal voltage	VAC	115
Frequency	Hz	60
Speed	min^{-1}	3300
Power input	W	26.0
Min. ambient temperature	°C	-25
Max. ambient temperature	°C	70
Air flow	m^3/h	440
Sound power level	B	6.4
Sound pressure level	dB(A)	60

ml = Max. load · me = Max. efficiency · fa = Running at free air · cs = Customer specs · cu = Customer unit
Subject to alterations

AC axial compact fan

Technical features

Mass	1 kg
Dimensions	172 Ø x 51 mm
Material of impeller	Sheet steel, coated in black
Housing material	Die-cast aluminium
Direction of air flow	Exhaust over struts
Direction of rotation	Left, looking at rotor
Bearing	Ball bearings
Lifetime L10 at 40 °C	57000 h
Lifetime L10 at maximum temperature	28000 h
Connection line	2 flat connectors 2.8 x 0.5 mm. Housing with grounding lug for M4 x 6.
Motor protection	Protected from overload by a thermal switch
Approval	VDE, CSA, UL, CE

ebm-papst St. Georgen GmbH & Co. KG · Hermann-Papst-Str. 1 · D-78112 St. Georgen · Phone +49 (0) 7724 81-0 · Fax +49 (0) 7724 81-1309 · info2@de.ebmpapst.com · www.ebmpapst.com

AC axial compact fan

Product drawing

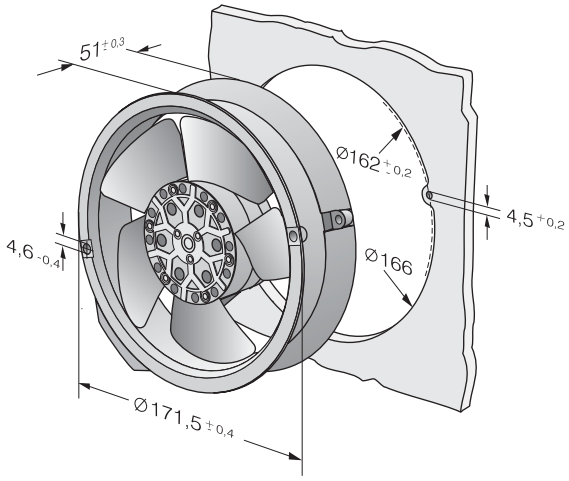

ebm-papst St. Georgen GmbH & Co. KG · Hermann-Papst-Str. 1 · D-78112 St. Georgen · Phone +49 (0) 7724 81-0 · Fax +49 (0) 7724 81-1309 · info2@de.ebmpapst.com · www.ebmpapst.com

AC axial compact fan

Charts: Air flow

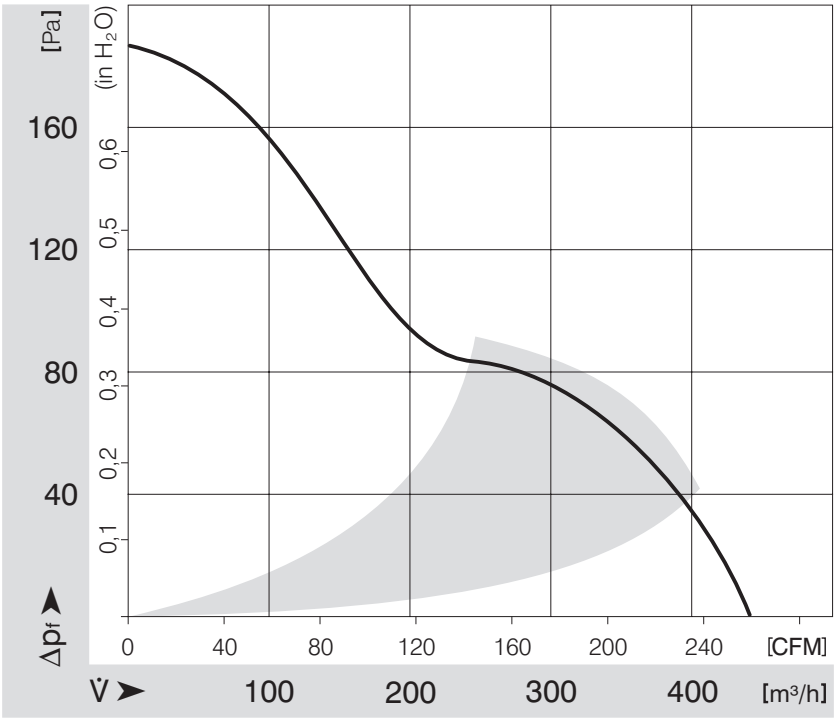

ebm-papst St. Georgen GmbH & Co. KG · Hermann-Papst-Str. 1 · D-78112 St. Georgen · Phone +49 (0) 7724 81-0 · Fax +49 (0) 7724 81-1309 · info2@de.ebmpapst.com · www.ebmpapst.com