4850 N

AC axial compact fan



ebm-papst St. Georgen GmbH & Co. KG
Hermann-Papst-Str. 1
D-78112 St. Georgen
Phone +49 (0) 7724 81-0
Fax +49 (0) 7724 81-1309
info2@de.ebmpapst.com
www.ebmpapst.com

Nominal data

Type	4850 N	
Phase		1~
Nominal voltage	VAC	230
Frequency	Hz	50
Speed	min^{-1}	1800
Power input	W	10.0
Min. ambient temperature	°C	-10
Max. ambient temperature	°C	70
Air flow	m^3/h	100
Sound power level	B	4.4
Sound pressure level	dB(A)	32

ml = Max. load · me = Max. efficiency · fa = Running at free air · cs = Customer specs · cu = Customer unit
Subject to alterations

AC axial compact fan

Technical features

Mass	0.550 kg
Dimensions	119 x 119 x 38 mm
Material of impeller	Sheet steel, coated in black
Housing material	Die-cast aluminium
Direction of air flow	Intake over struts
Direction of rotation	Right, looking at rotor
Bearing	Sintec sleeve bearing
Lifetime L10 at 40 °C	57500 h
Lifetime L10 at maximum temperature	27500 h
Connection line	2 flat plugs 3.0 x 0.5 mm. Housing with grounding lugs for screw M4 and UNC.
Motor protection	Protected from overload using impedance protection
Approval	VDE, CSA, UL, CE
Option	Variants optionally available with reinforced mounting flanges and customizable single-strand wiring.

ebm-papst St. Georgen GmbH & Co. KG · Hermann-Papst-Str. 1 · D-78112 St. Georgen · Phone +49 (0) 7724 81-0 · Fax +49 (0) 7724 81-1309 · info2@de.ebmpapst.com · www.ebmpapst.com

AC axial compact fan

Product drawing

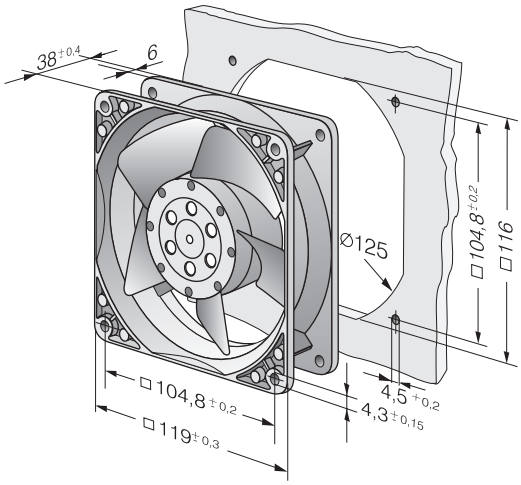

ebm-papst St. Georgen GmbH & Co. KG · Hermann-Papst-Str. 1 · D-78112 St. Georgen · Phone +49 (0) 7724 81-0 · Fax +49 (0) 7724 81-1309 · info2@de.ebmpapst.com · www.ebmpapst.com

AC axial compact fan

Charts: Air flow

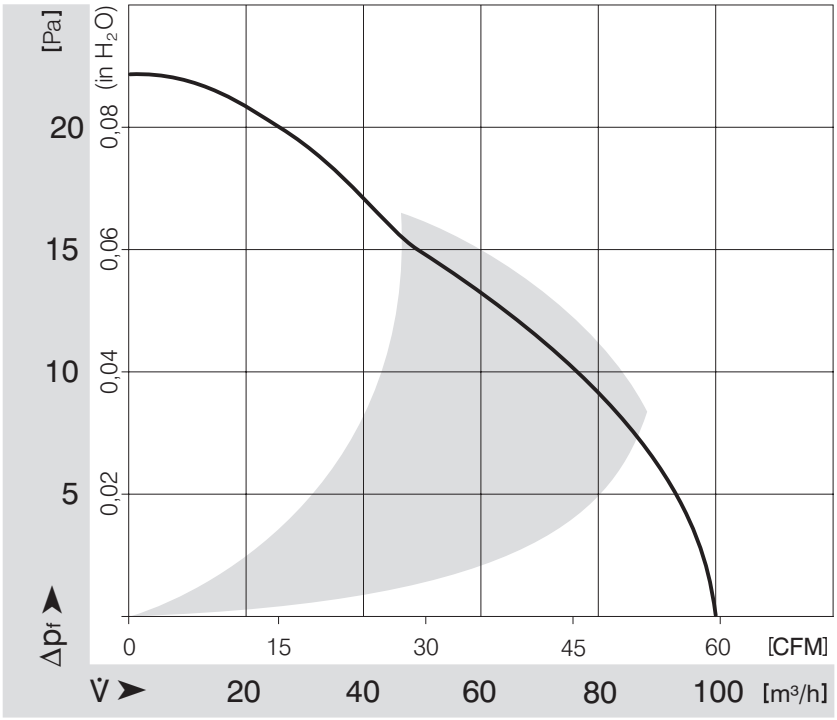

ebm-papst St. Georgen GmbH & Co. KG · Hermann-Papst-Str. 1 · D-78112 St. Georgen · Phone +49 (0) 7724 81-0 · Fax +49 (0) 7724 81-1309 · info2@de.ebmpapst.com · www.ebmpapst.com