DC axial compact fan



ebm-papst St. Georgen GmbH & Co. KG
Hermann-Papst-Str. 1
D-78112 St. Georgen
Phone +49 (0) 7724 81-0
Fax +49 (0) 7724 81-1309
info2@de.ebmpapst.com
www.ebmpapst.com

Nominal data

Type	4118 NH3	
Nominal voltage	VDC	48
Nominal voltage range	VDC	36 .. 60
Speed	min-1	6000
Power input	W	20
Min. ambient temperature	°C	-20
Max. ambient temperature	°C	65
Air flow	m3/h	310
Sound power level	B	7.2
Sound pressure level	dB(A)	65

ml = Max. load · me = Max. efficiency · fa = Running at free air · cs = Customer specs · cu = Customer unit
Subject to alterations

DC axial compact fan

Technical features

General description	* Free air power consumption, these values may be considerably higher at the operating point.
Impeller material	Fibreglass-reinforced plastic (PA)
Mass	0.390 kg
Dimensions	119 x 119 x 38 mm
Housing material	Die-cast aluminium
Direction of air flow	Inlet over bars
Direction of rotation	Clockwise, looking at rotor
Bearing	Ball bearings
Lifetime L10 at 40 °C	65000 h
Lifetime L10 at maximum temperature	37500 h
Connection line	Single strands AWG 22, UL 1007, TR 64, bared and tin-plated.
Motor protection	Protected against reverse polarity and locking.
Approval	CE
Option	Speed signal

ebm-papst St. Georgen GmbH & Co. KG · Hermann-Papst-Str. 1 · D-78112 St. Georgen · Phone +49 (0) 7724 81-0 · Fax +49 (0) 7724 81-1309 · info2@de.ebmpapst.com · www.ebmpapst.com

DC axial compact fan

Product drawing

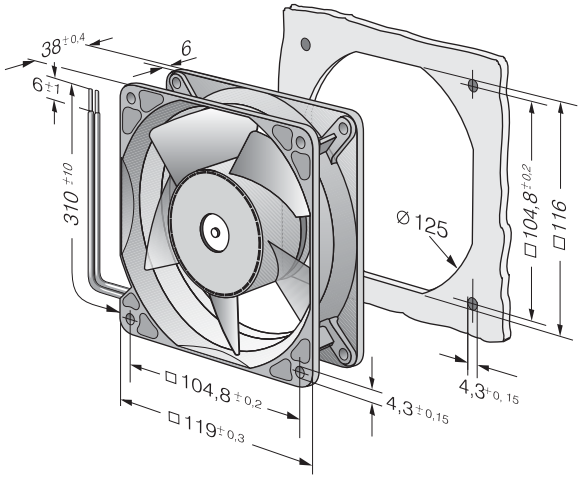

ebm-papst St. Georgen GmbH & Co. KG · Hermann-Papst-Str. 1 · D-78112 St. Georgen · Phone +49 (0) 7724 81-0 · Fax +49 (0) 7724 81-1309 · info2@de.ebmpapst.com · www.ebmpapst.com

DC axial compact fan

Charts: Air flow

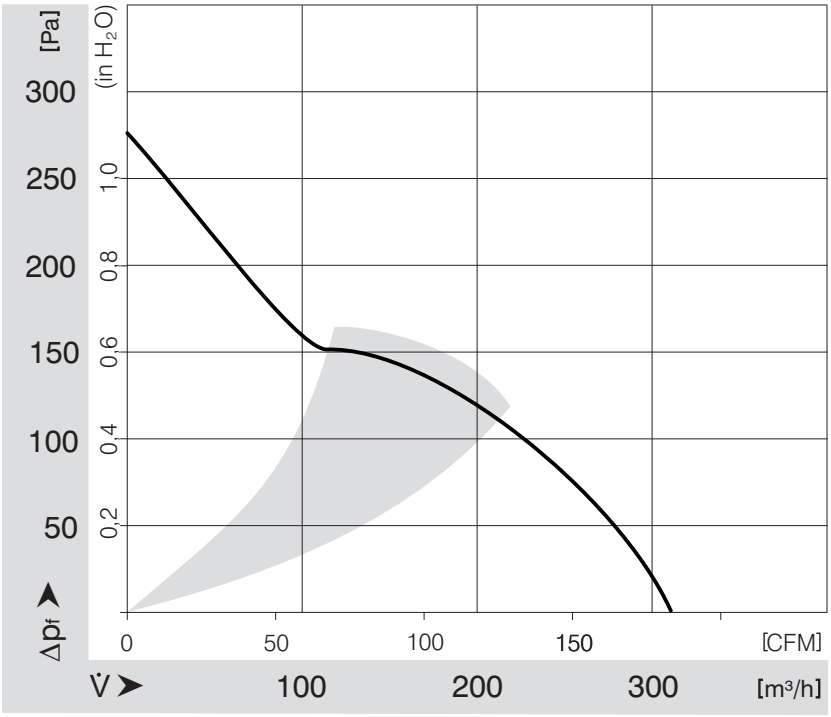

ebm-papst St. Georgen GmbH & Co. KG · Hermann-Papst-Str. 1 · D-78112 St. Georgen · Phone +49 (0) 7724 81-0 · Fax +49 (0) 7724 81-1309 · info2@de.ebmpapst.com · www.ebmpapst.com