Max. 80 m³/h

DC centrifugal fans

☐ 127 x 25 mm

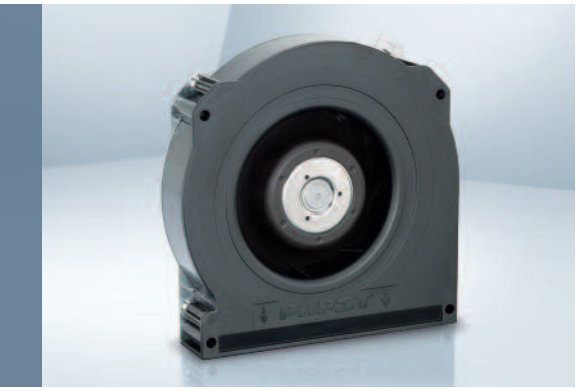

- **Material:** Scroll housing: GRP[1)]
  Impeller: GRP[1)]
  Base plate: Sheet steel
- **Direction of air flow:** Axial: Intake,
  Centrifugal: Exhaust
- **Connection:** via single wires AWG 22, TR 64
- **Highlights:** Optional protective cap for outlet opening
  Backward-curved impeller
- **Weight:** 320 g

- **Possible special versions:**
  (See chapter DC fans - specials)
  - Speed signal
  - Go / NoGo alarm
  - Alarm with speed limit
  - External temperature sensor
  - Internal temperature sensor
  - PWM control input
  - Analog control input
  - Moisture protection
  - Degree of protection: IP 54

1) Fiberglass-reinforced plastic

Series RLF 100 **Nominal data**	Air flow	Air flow	**Nominal voltage**	Voltage range	Sound power level	Sintec sleeve bearings Ball bearings	Power consumption	Nominal speed	Temperature range	Service life L_{10} (40 °C) ebm-papst standard Service life L_{10} (T_{max}) ebm-papst standard	Life expectancy L_{10IPC} (40 °C) see page 17	Curve
Type	**m³/h**	**cfm**	**VDC**	**VDC**	**Bel(A)**	**□ / ■**	**Watts**	**rpm⁻¹**	**°C**	**Hours**	**Hours**	
RLF 100-11/12	64	37.7	**12**	8...15	6.4	■	8.0	5 100	-20...+75	80 000 / 30 000	135 000	①
RLF 100-11/14	64	37.7	**24**	16...30	6.4	■	8.0	5 100	-20...+75	80 000 / 30 000	135 000	①
RLF 100-11/18	64	37.7	**48**	36...60	6.4	■	8.6	5 100	-20...+75	80 000 / 30 000	135 000	①
High speed models with open-collector tachometer and PWM speed control.												
RLF 100-11/12/2 HP-200	80	47.1	**12**	10...13.2	7.5	■	18.6	6 400	-20...+60	72 500 / 45 000	122 500	②
RLF 100-11/18/2 HP-182	80	47.1	**48**	43...53	7.5	■	17.0	6 400	-20...+70	72 500 / 35 000	122 500	②

Subject to change

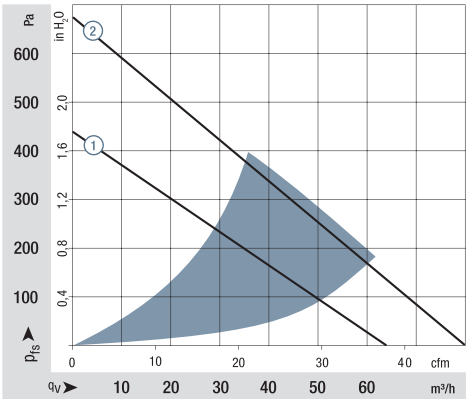

Air performance measured according to: ISO 5801.
Installation category A, without contact protection.
Noise: Total sound power level L_{WA} ISO 103002 measured on a hemisphere with a radius of 2 m.
Sound pressure level L_{pA} measured at 1 m distance from fan axis.
The values given are applicable only under the specified measuring conditions and may differ depending on the installation conditions.
In the event of deviation from the standard configuration, the parameters must be checked after installation!
For detailed information see
http://www.ebmpapst.com/general conditions

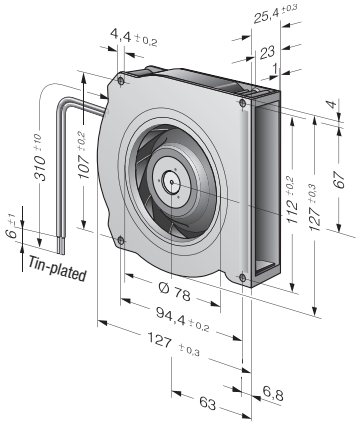

ebmpapst