RG90DC Series Flatpak

135x135x38mm

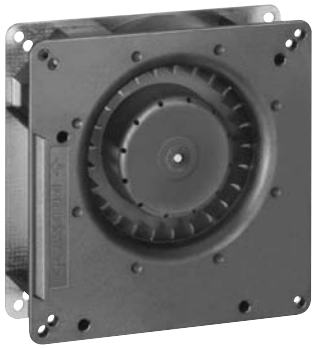

- DC radial blower with electronically commutated external rotor motor. Fully integrated commutation electronics.
- With electronic protection against reverse polarity, blocking and overloading by PTC-resistor; partially impedance protected.
- Spiral housing and blower of fiberglass reinforced plastic. Housing base of galvanised steel plate.
- Radial air exhaust through housing port.
- Electrical connection via 2 leads AWG 22, TR 64. Stripped and tinned ends.
- UL, CSA, VDE approvals on some models, please contact application engineering.

Part Number	Curve	CFM @ 0	VDC	Volt. Range	Power (W)	dBA	Max Amb. Temp C	Bearing Type	Features	Wgt. (lbs)
RG90-18/12N	1	32.4	12	7 to 15	6.0	55	75	Ball	Leads	0.97
RG90-18/12NG	1	32.4	12	7 to 15	6.0	55	75	Sleeve	Leads	0.97
RG90-18/14N	1	32.4	24	12 to 28	5.5	55	75	Ball	Leads	0.97
RG90-18/14NG	1	32.4	24	12 to 28	5.5	55	75	Sleeve	Leads	0.97
RG90-18/18N	1	32.4	48	36 to 56	5.5	55	75	Ball	Leads	0.97

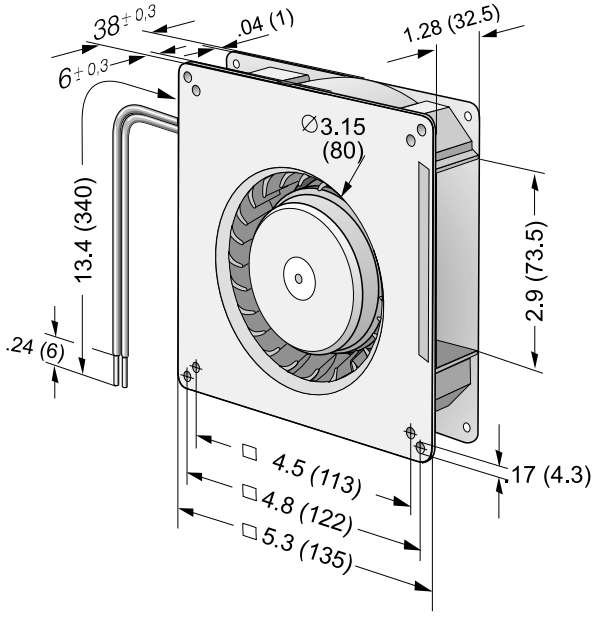

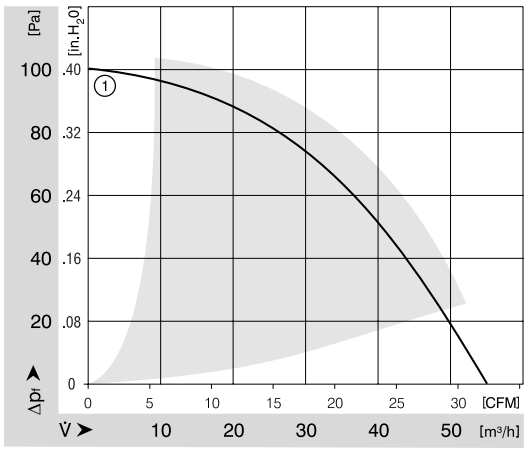

ebmpapst

e-mail: sales@us.ebmpapst.com · TEL: 860-674-1515 · FAX: 860-674-8536
ebm-papst Inc., 100 Hyde Road, Farmington, CT 06034 USA
ebm-papst Inc., 2006 © ebm-papst Inc. reserves the right to change any specifications or data without notice