Max. 67 m³/h

DC axial fans

☐ 60 x 25 mm



- **Material:** Housing: GRP[1] (PBT)
  Impeller: GRP[1] (PA)
- **Direction of air flow:** Exhaust over struts
- **Direction of rotation:** Clockwise, looking towards rotor
- **Connection:** Via single wires AWG 22, TR 64
- **Highlights:** Very low-noise motor
- **Weight:** 85 g

- **Possible special versions:**
  (See chapter DC fans - specials)
  - Speed signal
  - Go / NoGo alarm
  - Alarm with speed limit
  - External temperature sensor
  - Internal temperature sensor
  - PWM control input
  - Analog control input
  - Moisture protection

1) Fiberglass-reinforced plastic

Series 620 **Nominal data**	Air flow	Air flow	**Nominal voltage**	Voltage range	Sound pressure level	Sound power level	Sintec sleeve bearings Ball bearings	Power consumption	Nominal speed	Temperature range	Service life L_{10} (40 °C) ebm-papst standard Service life L_{10} (T_{max}) ebm-papst standard	Life expectancy L_{10IPC} (40 °C) see page 17	Curve
Type	**m³/hcfm**	**VDC**	**VDC**	**dB(A)**	**Bel(A)**	**□/■**	**Watts**	**rpm⁻¹**	**°C**	**Hours**	**Hours**		
622 L	21	12.4	**12**	8...15	20	3.7	■	0.5	3 200	-20...+85	80 000 / 20 000	135 000	①
622 M	30	17.7	**12**	8...15	29	4.3	■	1.0	4 550	-20...+75	77 500 / 30 000	130 000	②
622 N	40	23.5	**12**	8...15	35	4.7	■	1.9	6 100	-20...+70	72 500 / 35 000	122 500	③
622 H	46	27.1	**12**	8...15	39	5.1	■	2.3	6 850	-20...+70	70 000 / 35 000	117 500	④
622 HH	56	33.0	**12**	8...15	43	5.6	■	3.5	8 200	-20...+70	65 000 / 32 500	110 000	⑤
622/2 H3P	67	39.4	**12**	8...13.2	48	5.9	■	5.5	9 700	-20...+60	52 500 / 32 500	87 500	⑥
624 L	21	12.4	**24**	18...28	20	3.7	■	1.0	3 200	-20...+70	80 000 / 40 000	135 000	①
624 M	30	17.7	**24**	12...28	29	4.3	■	1.5	4 550	-20...+70	77 500 / 37 500	130 000	②
624 N	40	23.5	**24**	12...28	35	4.7	■	2.2	6 100	-20...+70	72 500 / 35 000	122 500	③
624 H	46	27.1	**24**	18...28	39	5.1	■	2.4	6 850	-20...+70	70 000 / 35 000	117 500	④
624 HH	56	33.0	**24**	18...28	43	5.6	■	3.6	8 200	-20...+70	65 000 / 32 500	110 000	⑤
624/2 H3P	67	39.4	**24**	18...28	48	5.9	■	5.6	9 700	-20...+60	52 500 / 32 500	87 500	⑥
628 HH	56	33.0	**48**	36...60	43	5.6	■	4.2	8 200	-20...+70	65 000 / 32 500	110 000	⑤

Subject to change

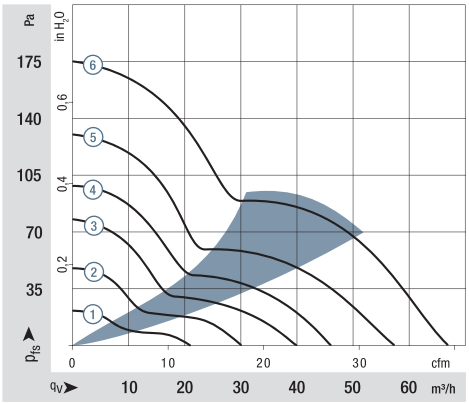

Air performance measured according to: ISO 5801.
Installation category A, without contact protection.
Noise: Total sound power level L_{WA} ISO 103002 measured on a hemisphere with a radius of 2 m.
Sound pressure level L_{pA} measured at 1 m distance from fan axis.
The values given are applicable only under the specified measuring conditions and may differ depending on the installation conditions.
In the event of deviation from the standard configuration, the parameters must be checked after installation!
For detailed information see
http://www.ebmpapst.com/general conditions

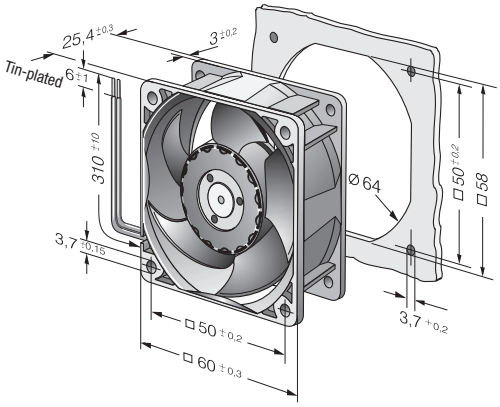

Mouser Electronics

Authorized Distributor

Click to View Pricing, Inventory, Delivery & Lifecycle Information:

ebm-papst:
622HH 624HH 624M 622H 622M 622L 624N 622N 624L 624H 624/2H3P 622/2H3P 622/2N 624/2HH 6224N/12M 628HH 622NR