G2S120-FE03-22

AC centrifugal fan

forward-curved

with housing (without flange)

ebm-papst Mulfingen GmbH & Co. KG
Bachmühle 2 · D-74673 Mulfingen
Phone +49 7938 81-0
Fax +49 7938 81-110
info1@de.ebmpapst.com
www.ebmpapst.com

Limited partnership · Headquarters Mulfingen
Amtsgericht (court of registration) Stuttgart · HRA 590344

General partner Elektrobau Mulfingen GmbH · Headquarters Mulfingen
Amtsgericht (court of registration) Stuttgart · HRB 590142

Nominal data

Type	**G2S120-FE03-22**
Motor	**M2S052-CA**

Phase		1~
Nominal voltage	VAC	230
Frequency	Hz	50
Method of obtaining data		ml
Valid for approval/standard		CE
Speed (rpm)	min^{-1}	2800
Power consumption	W	43
Current draw	A	0.3
Min. back pressure	Pa	245
Min. back pressure	in. wg	0.98
Max. ambient temperature	°C	55

ml = Max. load · me = Max. efficiency · fa = Free air · cs = Customer specification · ce = Customer equipment
Subject to change

AC centrifugal fan

forward-curved

with housing (without flange)

Technical description

Weight	1.1 kg
Size	120 mm
Motor size	52
Rotor surface	Painted black
Impeller material	Sheet steel, painted black
Housing material	Die-cast aluminum
Direction of rotation	Clockwise, viewed toward rotor
Degree of protection	IP00
Insulation class	"F"
Moisture (F) / Environmental (H) protection class	H1
Max. permitted ambient temp. for motor (transport/storage)	+ 80 °C
Min. permitted ambient temp. for motor (transport/storage)	- 40 °C
Installation position	Shaft horizontal or rotor on bottom; rotor on top on request
Condensation drainage holes	On rotor side
Mode	S1
Motor bearing	Ball bearing
Touch current according to IEC 60990 (measuring circuit Fig. 4, TN system)	< 0.75 mA
With cable	Variable
Protection class	Built-in component with basic insulation, protection class results from installation according to intended use
Conformity with standards	EN 60034-1; EN 60204-1; EN 60335-1, motor not provided with overheating protection at the factory; CE

ebm-papst Mulfingen GmbH & Co. KG · Bachmühle 2 · D-74673 Mulfingen · Phone +49 (0) 7938 81-0 · Fax +49 (0) 7938 81-110 · info1@de.ebmpapst.com · www.ebmpapst.com

AC centrifugal fan

forward-curved

with housing (without flange)

Product drawing

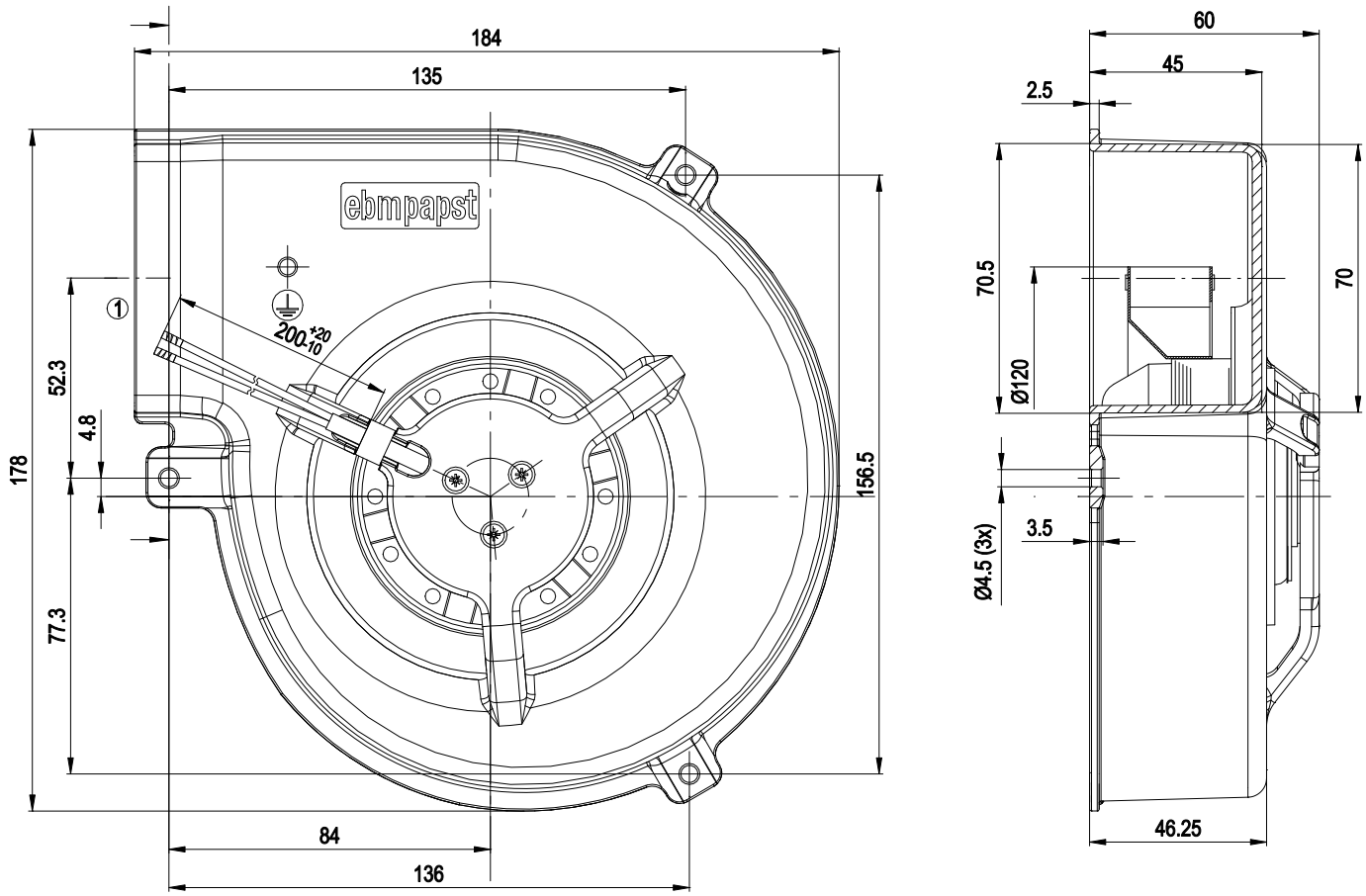

1	Cable Dipotherm, 2x crimped splices

Connection diagram

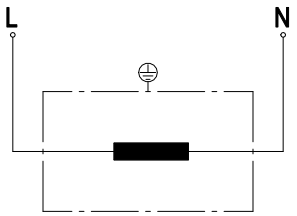

L	white	N	white

ebm-papst Mulfingen GmbH & Co. KG · Bachmühle 2 · D-74673 Mulfingen · Phone +49 (0) 7938 81-0 · Fax +49 (0) 7938 81-110 · info1@de.ebmpapst.com · www.ebmpapst.com

AC centrifugal fan

forward-curved

with housing (without flange)

Curves: Air performance 50 Hz

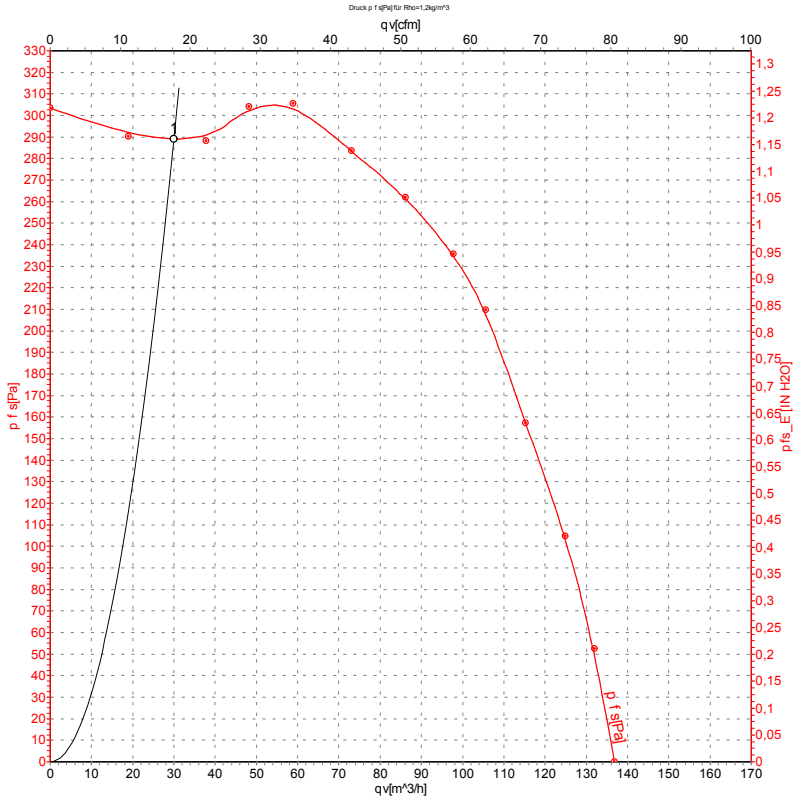

Measurement: LU-57619-1

Air performance measured according to ISO 5801 installation category A. For detailed information on the measurement setup, contact ebm-papst. Intake sound level: Sound power level according to ISO 13347 / sound pressure level measured at 1 m distance from fan axis. The values given are valid under the specified measuring conditions and may vary due to conditions of installation. For deviations from the standard configuration, the parameters have to be checked on the installed unit.

Measured values

	U	f	n	P_e	I	q_V	p_{fs}	q_V	p_{fs}
	V	Hz	min^{-1}	W	A	m^3/h	Pa	cfm	in. wg
1	230	50	2800	43	0.30	30	289	20	1.16

U = Voltage · f = Frequency · n = Speed (rpm) · P_e = Power consumption · I = Current draw · q_V = Air flow · p_{fs} = Pressure increase

ebm-papst Mulfingen GmbH & Co. KG · Bachmühle 2 · D-74673 Mulfingen · Phone +49 (0) 7938 81-0 · Fax +49 (0) 7938 81-110 · info1@de.ebmpapst.com · www.ebmpapst.com