G2S097 Series Centrifugal Blower

Ø 97mm



- AC single inlet, forward curved centrifugal blower. Via a bracket, the integrated external-rotor motor is mounted on one side of the housing.
- Housing and impeller of galvanised sheet-steel. Forward curved impellers are directly press-fitted onto the rotor of the external-rotor motor.
- Direction of rotation is CW as seen from suction side. Insulation class "B".
- Maintenance-free ball bearings.
- UL, CSA, VDE approvals on some models, please contact application engineering.

Part Number	Curve	CFM @ 0	VAC	Hertz	Power (W)	dBA	Max Amb. Temp C	Bearing Type	Features	Capacitor (µF)	Wgt. (lbs)
G2S097-DB61-08	1	26	115	60*	23	37	55	Ball	Leads	-	1.81
G2S097-DB03-01	1	26	230	60*	22	38	50	Ball	Leads	-	1.81

* 50 Hz data available.

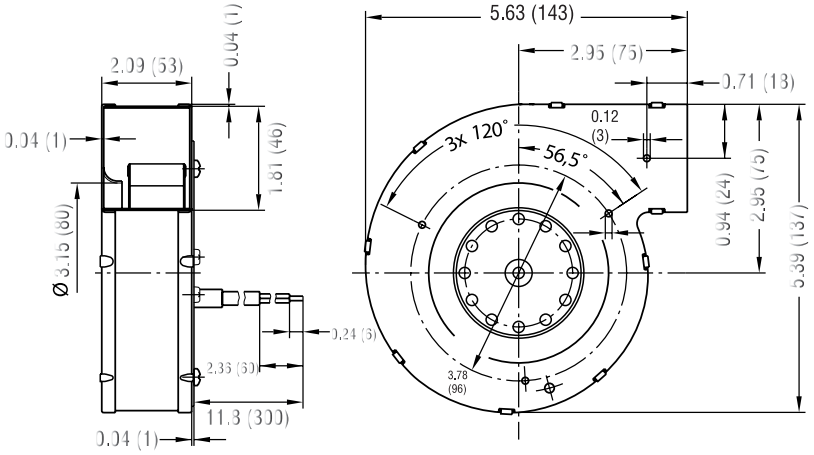

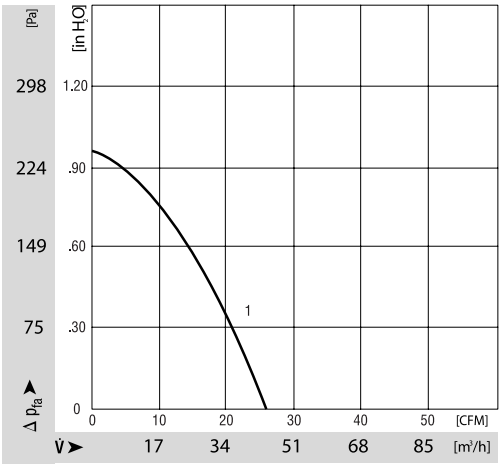

ebmpapst

e-mail: sales@us.ebmpapst.com · TEL: 860-674-1515 · FAX: 860-674-8536
ebm-papst Inc., 100 Hyde Road, Farmington, CT 06034 USA

ebm-papst Inc., 2006 © ebm-papst Inc. reserves the right to change any specifications or data without notice