AC centrifugal blowers (exhaust air)

for solid fuel heating systems, single inlet, Ø 180



from page 86	Scroll dimensions
page 93	Electrical connections A1), D)
More at	www.ebmpapst.com

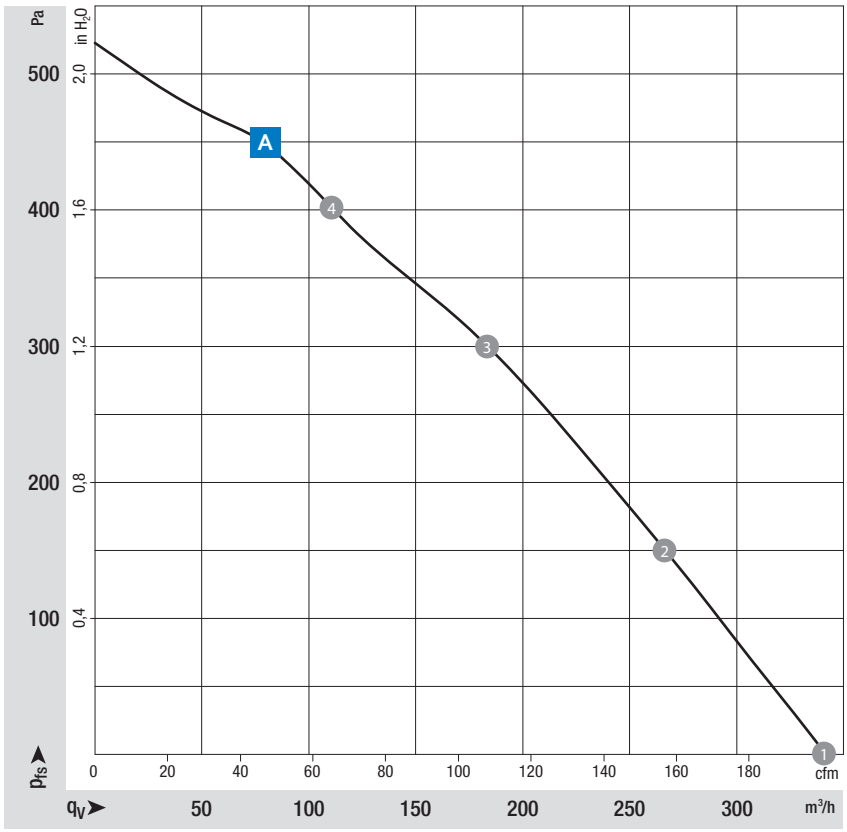

Air performance measured as per: ISO 5801, Installation category A, with ebm-papst scroll housing without protection against accidental contact. Suction-side noise levels: Lw_A as per ISO 13347, Lp_A measured at 1m distance to fan axis. The acoustic values given are only valid under the measurment conditions listed and may vary depending on the installation situation. With any deviation to the standard setup, the specifi c values have to be checked and reviewed once installed or fi tted! For detailed information see page 94 ff.

Heat output range[1]

- 24 – 35kW

Material/surface

- Impeller: Corrosion resistant sheet steel
- Housing: Hot-dip aluminised sheet steel

Characteristics

- Direction of rotation: clockwise, seen on impeller
- Type of protection: IP 44
- Insulation class: "F"
- Mounting position: any
- Condensate discharges: none, open rotor
- Mode of operation: Continuous operation (S1)
- Bearings: Maintenance-free ball bearings
- Max. exhaust gas temperature: Continuous operation 250°C
- Motor protection: TOP wired internally
- Touch current: < 0.75mA acc. to IEC 60990 (test circuit, illustration 4)
- Standard: Speed monitoring via Hall IC
- Protection class: I

Standards and approvals

- Standards: EN 60335-1, CE; UKCA on request
- Approvals: UL, CSA, CCC, EAC are applied for

Optional

- Additional shaft seal see page 88

[1] Heat output range
approx. data; heat output depends on the specific system conditions.

Nominal voltage 230VAC, 50Hz				Motor	Characteristic Curve	Operating point	Air flow	Speed	Max. input power	Max. current draw	Capacitor	Sound pressure level	Perm. ambient temperature	Weight
Type	Part number	Fan type					m³/h	rpm	W	A	µF/VDB	db(A)	°C	kg
VPW0180X2MES	G2E180CV8201	Cable design*		M2E 068-CF	A	1	340	2600	65	0.30	1.0/400	73	-25...+60	3.0
	G2E180CV8205	Plug design				2	340	2645	60	0.26		70		
						3	340	2700	55	0.24		64		
						4	340	2765	48	0.21		62		
VPW0180X2MES	G2E180GV8201	Cable design*												
	G2E180GV8205	Plug design												

Subject to changes. * Cable design also possible without protection hood

Technical drawing

Dimensions in mm

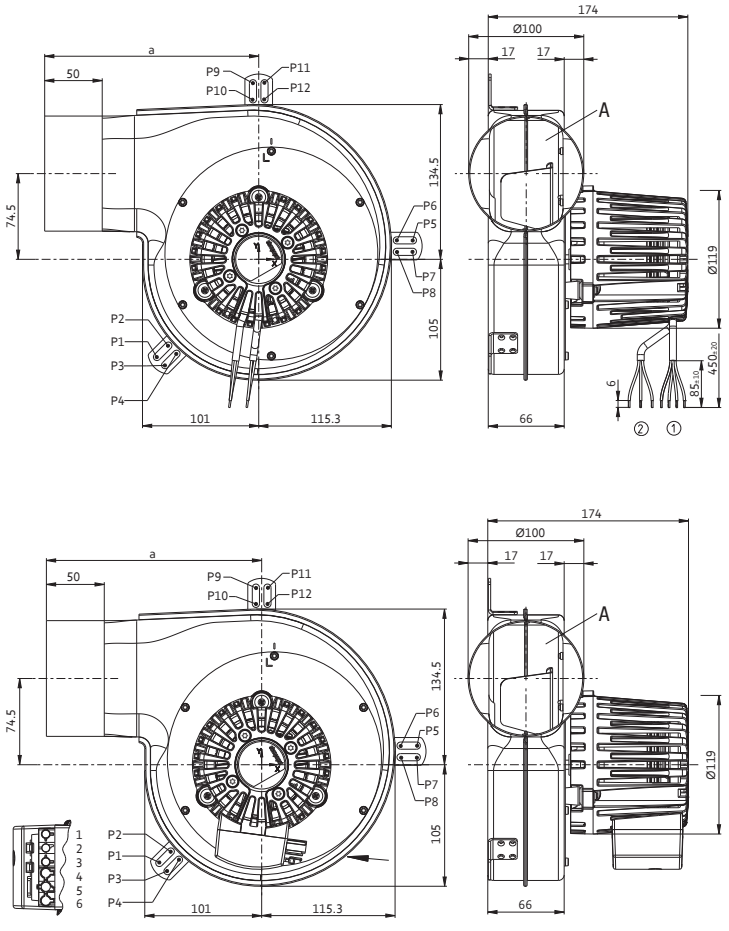

Detail A
G2E180GV82**

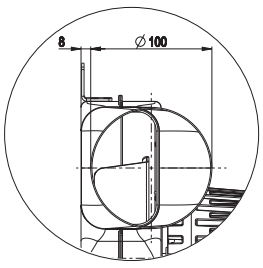

Connection		
No.	Function	Color
1	L	blue
2	PE	green/yellow
3	N	black
4	GND	black
5	OUT	white
6	VCC	red

P	X	Y
1	-84.9	-88.4
2	-75	-78.5
3	-92	-81.3
4	-82	-71.4
5	16.5	134
6	16.5	120
7	6.5	134
8	6.5	120
9	153	-5
10	139	-5
11	153	5
12	139	5

Dimensions		
	VPW0180X2MES G2E180CV82**	VPW0180X2MES G2E180GV82**
a	186	223