D2E133-DM47-01

AC centrifugal fan

forward curved, dual inlet

with housing (without flange)

ebm-papst Mulfingen GmbH & Co. KG
Bachmühle 2
D-74673 Mulfingen
Phone +49 7938 81-0
Fax +49 7938 81-110
info1@de.ebmpapst.com
www.ebmpapst.com

Nominal data

Type	**D2E133-DM47-01**
Motor	**M2E068-DF**

Phase		1~	1~
Nominal voltage	VAC	230	230
Frequency	Hz	50	60
Type of data definition		ml	ml
Valid for approval / standard		CE	CE
Speed	min^{-1}	1650	2200
Power input	W	175	185
Current draw	A	0.78	0.82
Motor capacitor	µF	3	3
Capacitor voltage	VDB	450	450
Min. back pressure	Pa	100	250
Max. ambient temperature	°C	40	40

ml = max. load · me = max. efficiency · rfa = running at free air · cs = customer specs · cu = customer unit
Subject to alterations

AC centrifugal fan

forward curved, dual inlet

with housing (without flange)

Technical features

Leakage current	< 0.75 mA
General description	Without flange
Size	133 mm
Operation mode	Continuous operation (S1)
Direction of rotation	Clockwise, seen on rotor
Mounting position	Any
Humidity class	F0
Insulation class	"B"
Cable exit	Axial
Condensate discharge holes	None
Motor bearing	Ball bearing
Mass	3.8 kg
Housing material	Sheet steel, hot-galvanised
Material of impeller	Sheet steel, hot-galvanised
Motor protection	Thermal overload protector (TOP) wired internally
Product conforming to standard	CE; EN 60335-1
Surface of rotor	Partially cast in aluminium
Type of protection	IP 44; Depending on installation and position
Protection class	I
Max. permissible ambient motor temp. (transp./ storage)	+ 80 °C
Min. permissible ambient motor temp. (transp./storage)	- 40 °C
Approval	CCC

ebm-papst Mulfingen GmbH & Co. KG · Bachmühle 2 · D-74673 Mulfingen · Phone +49 7938 81-0 · Fax +49 7938 81-110 · info1@de.ebmpapst.com · www.ebmpapst.com

AC centrifugal fan

forward curved, dual inlet

with housing (without flange)

Product drawing

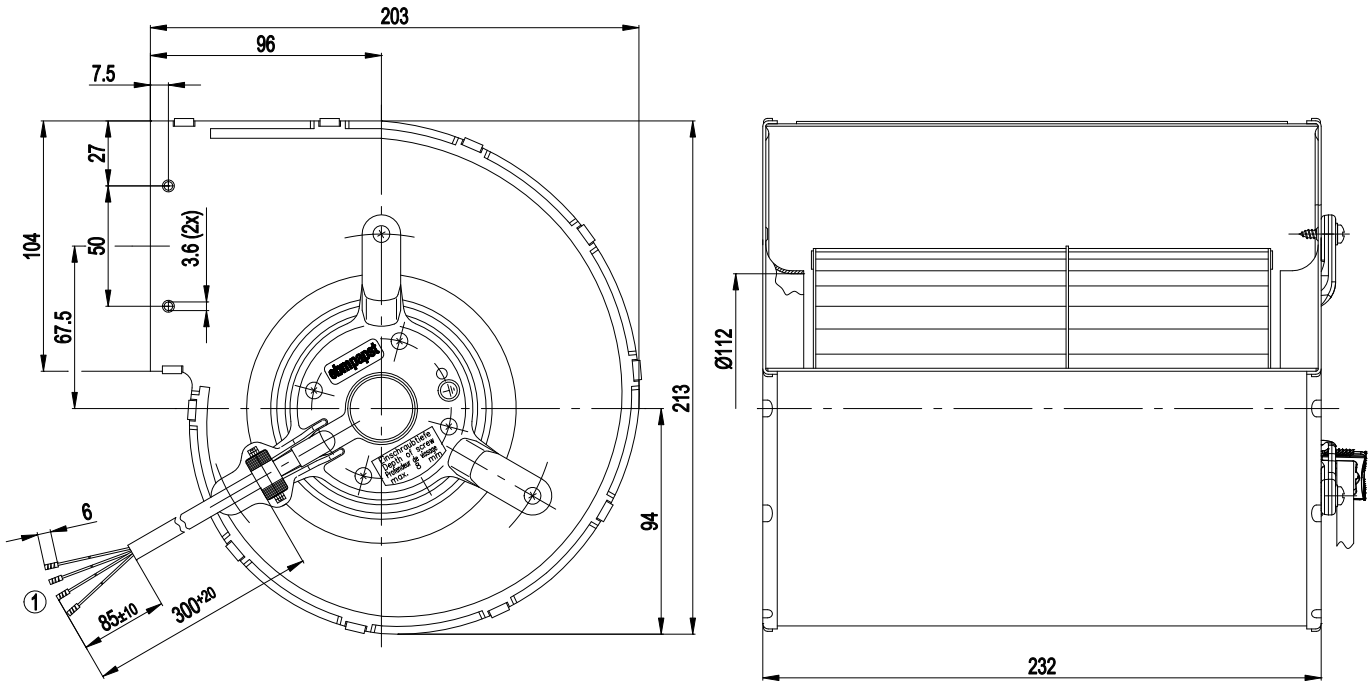

1	Connection line PVC 0.5mm², 4x brass lead tips crimped

Connection screen

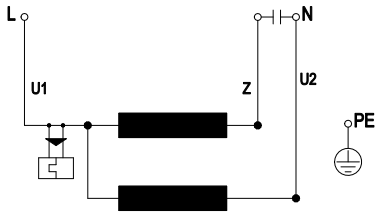

U1	blue	Z	brown	U2	black
PE	green/yellow				

ebm-papst Mulfingen GmbH & Co. KG · Bachmühle 2 · D-74673 Mulfingen · Phone +49 7938 81-0 · Fax +49 7938 81-110 · info1@de.ebmpapst.com · www.ebmpapst.com

AC centrifugal fan

forward curved, dual inlet

with housing (without flange)

Charts: Air flow 50 Hz

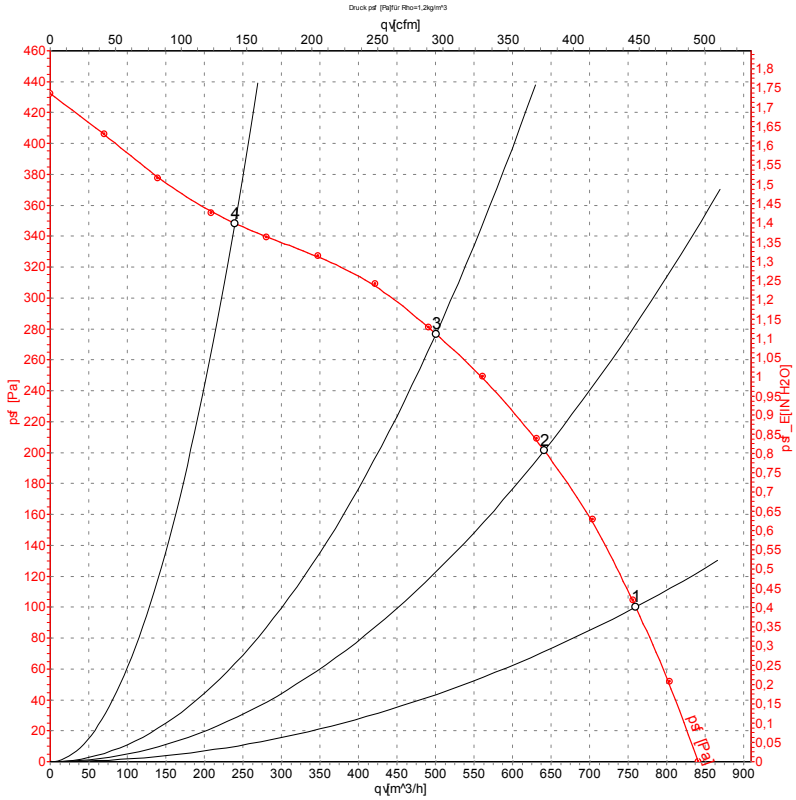

Measurement: LU-105266

Air performance measured as per ISO 5801 Installation Category A. For detailed information on the measuring set-up, please contact ebm-papst. Suction-side noise levels: LwA measured as per ISO 13347 / LpA measured with 1m distance to fan axis. The values given are valid under the measuring conditions mentioned above and may vary according to the actual installation situation. With any deviation from the standard set-up, the specific values have to be checked and reviewed with the unit installed.

Measured values

	U	f	n	P_e	I	qv	p_{sf}
	V	Hz	min^{-1}	W	A	m^3/h	Pa
1	230	50	1650	175	0.78	760	100
2	230	50	1990	162	0.70	640	200
3	230	50	2275	146	0.63	500	275
4	230	50	2530	125	0.54	240	350

ebm-papst Mulfingen GmbH & Co. KG · Bachmühle 2 · D-74673 Mulfingen · Phone +49 7938 81-0 · Fax +49 7938 81-110 · info1@de.ebmpapst.com · www.ebmpapst.com

AC centrifugal fan

forward curved, dual inlet

with housing (without flange)

Charts: Air flow 60 Hz

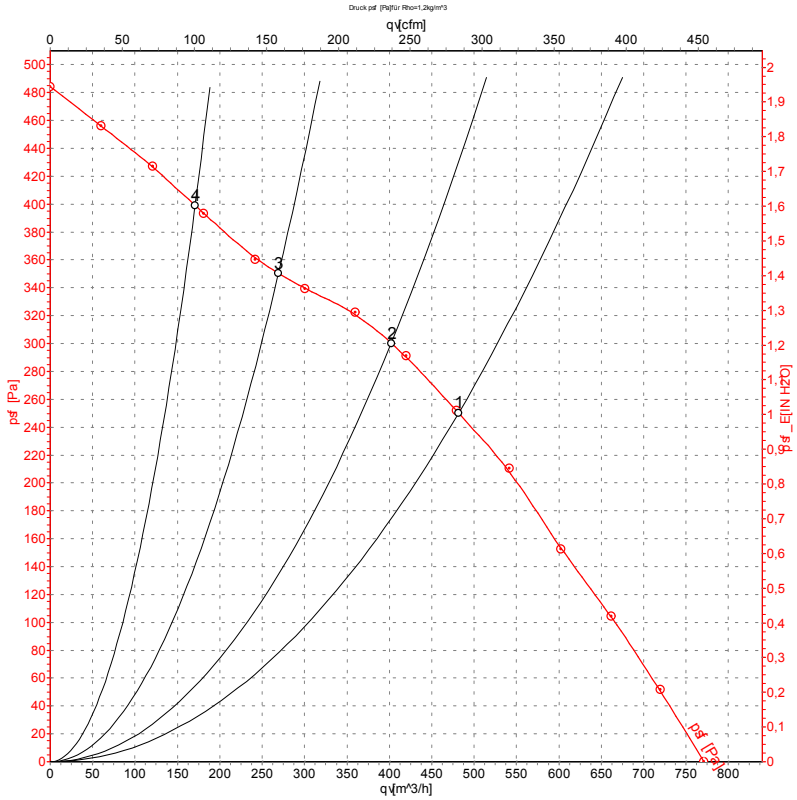

Measurement: LU-105267

Air performance measured as per ISO 5801 Installation Category A. For detailed information on the measuring set-up, please contact ebm-papst. Suction-side noise levels: LwA measured as per ISO 13347 / LpA measured with 1m distance to fan axis. The values given are valid under the measuring conditions mentioned above and may vary according to the actual installation situation. With any deviation from the standard set-up, the specific values have to be checked and reviewed with the unit installed.

Measured values

	U	f	n	P_e	I	qv	p_{sf}
	V	Hz	min^{-1}	W	A	m^3/h	Pa
1	230	60	2200	185	0.82	480	250
2	230	60	2360	181	0.78	400	300
3	230	60	2555	175	0.76	270	350
4	230	60	2685	171	0.74	170	400

ebm-papst Mulfingen GmbH & Co. KG · Bachmühle 2 · D-74673 Mulfingen · Phone +49 7938 81-0 · Fax +49 7938 81-110 · info1@de.ebmpapst.com · www.ebmpapst.com