D2E133-AM47-65

AC centrifugal fan

forward-curved, dual-intake

with housing (without flange)

ebm-papst Mulfingen GmbH & Co. KG
Bachmühle 2 · D-74673 Mulfingen
Phone +49 7938 81-0
Fax +49 7938 81-110
info1@de.ebmpapst.com
www.ebmpapst.com

Limited partnership · Headquarters Mulfingen
Amtsgericht (court of registration) Stuttgart · HRA 590344

General partner Elektrobau Mulfingen GmbH · Headquarters Mulfingen
Amtsgericht (court of registration) Stuttgart · HRB 590142

Nominal data

Type	**D2E133-AM47-65**		
Motor	**M2E068-DF**		
Phase		1~	1~
Nominal voltage	VAC	230	230
Frequency	Hz	50	60
Method of obtaining data		fa	ml
Valid for approval/standard		CE	CE
Speed (rpm)	min^{-1}	1500	1800
Power consumption	W	190	200
Current draw	A	0.84	0.88
Capacitor	µF	3	3
Capacitor voltage	VDB	450	450
Capacitor standard		S0	S0
Min. back pressure	Pa	0	100
Min. back pressure	inH2O	0	0.4
Min. ambient temperature	°C	-25	-25
Max. ambient temperature	°C	35	25

ml = Max. load · me = Max. efficiency · fa = Free air · cs = Customer specification · ce = Customer equipment
Subject to change

AC centrifugal fan

forward-curved, dual-intake

with housing (without flange)

Technical description

Weight	3.5 kg
Fan size	133 mm
Rotor surface	Unpainted
Impeller material	Sheet steel, galvanized
Housing material	Sheet steel, galvanized
Motor suspension	Motor mounted with brackets on one side
Direction of rotation	Clockwise, viewed toward rotor
Degree of protection	IP44; installation- and position-dependent
Insulation class	"B"
Moisture (F) / Environmental (H) protection class	H0 - dry environment
Max. permitted ambient temp. for motor (transport/storage)	+ 80 °C
Min. permitted ambient temp. for motor (transport/storage)	- 40 °C
Installation position	Any
Condensation drainage holes	None
Mode	S1
Motor bearing	Ball bearing
Touch current according to IEC 60990 (measuring circuit Fig. 4, TN system)	< 0.75 mA
Motor protection	Thermal overload protector (TOP) internally connected
With cable	Axial
Protection class	I (with customer connection of protective earth)
Conformity with standards	EN 60335-1; CE

ebm-papst Mulfingen GmbH & Co. KG · Bachmühle 2 · D-74673 Mulfingen · Phone +49 (0) 7938 81-0 · Fax +49 (0) 7938 81-110 · info1@de.ebmpapst.com · www.ebmpapst.com

AC centrifugal fan

forward-curved, dual-intake

with housing (without flange)

Product drawing

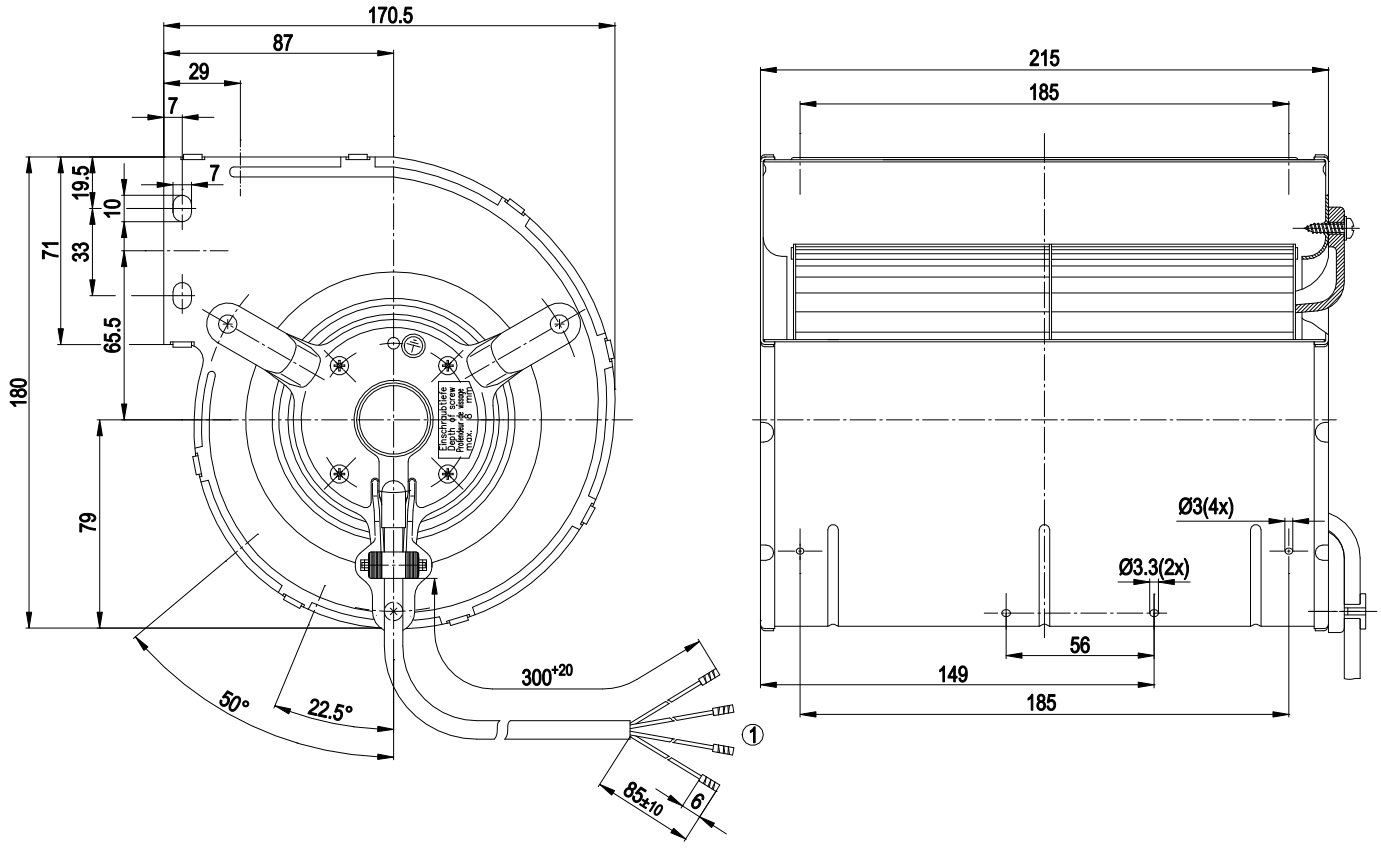

1	Cable PVC 4G 0.5 mm², 4x crimped splices

Connection diagram

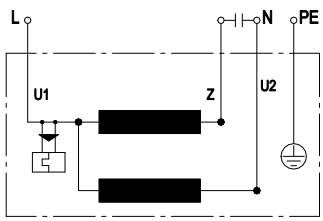

U1	blue	Z	brown	U2	black
PE	green/yellow				

ebm-papst Mulfingen GmbH & Co. KG · Bachmühle 2 · D-74673 Mulfingen · Phone +49 (0) 7938 81-0 · Fax +49 (0) 7938 81-110 · info1@de.ebmpapst.com · www.ebmpapst.com

AC centrifugal fan

forward-curved, dual-intake

with housing (without flange)

Curves: Air performance 50 Hz

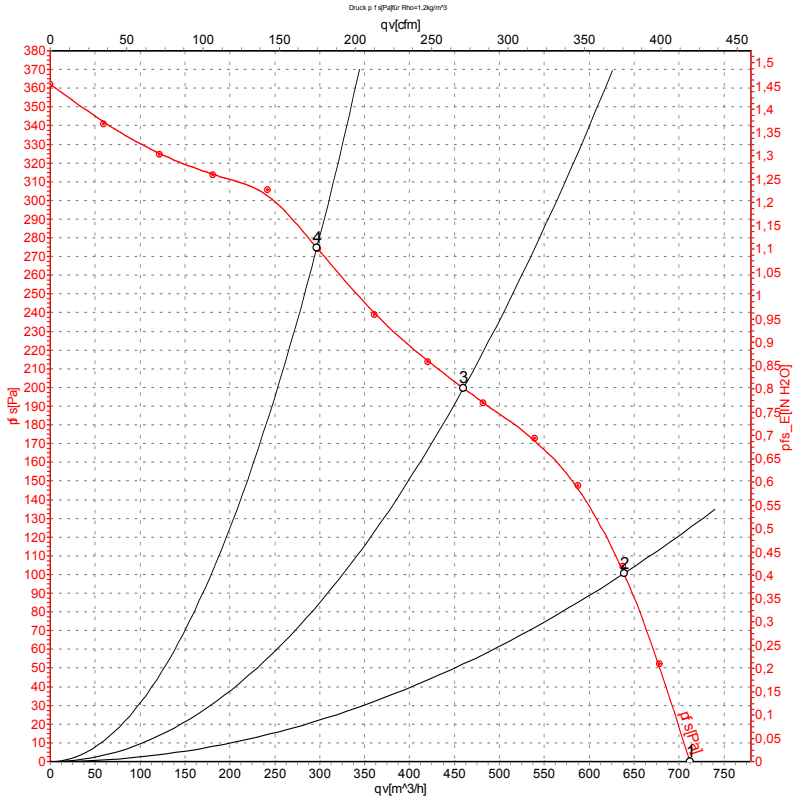

Measurement: LU-105263-1

Air performance measured according to ISO 5801 installation category A. For detailed information on the measurement setup, contact ebm-papst. Intake sound level: Sound power level according to ISO 13347 / sound pressure level measured at 1 m distance from fan axis. The values given are valid under the specified measuring conditions and may vary due to conditions of installation. For deviations from the standard configuration, the parameters have to be checked on the installed unit.

Measured values

	U	f	n	P_e	I	qv	p_{fs}	qv	p_{fs}
	V	Hz	min^{-1}	W	A	m^3/h	Pa	CFM	inH2O
1	230	50	1500	190	0.84	710	0	420	0.00
2	230	50	1890	164	0.72	640	100	375	0.40
3	230	50	2310	141	0.61	460	200	270	0.80
4	230	50	2570	118	0.52	295	275	175	1.10

U = Power supply · f = Frequency · n = Speed (rpm) · P_e = Power consumption · I = Current draw · qv = Air flow · p_{fs} = Pressure increase

ebm-papst Mulfingen GmbH & Co. KG · Bachmühle 2 · D-74673 Mulfingen · Phone +49 (0) 7938 81-0 · Fax +49 (0) 7938 81-110 · info1@de.ebmpapst.com · www.ebmpapst.com

AC centrifugal fan

forward-curved, dual-intake

with housing (without flange)

Curves: Air performance 60 Hz

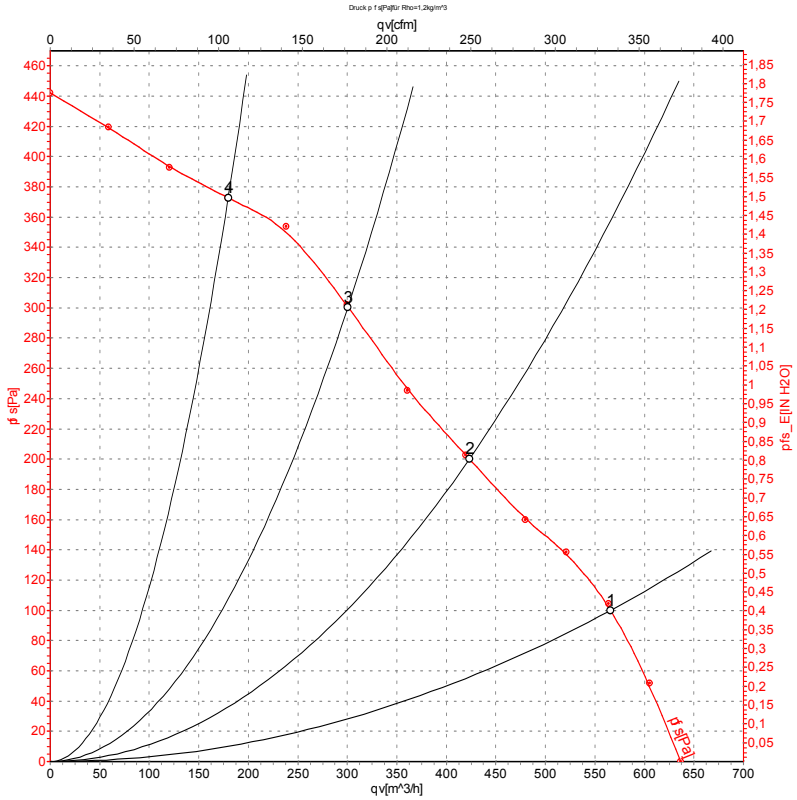

Measurement: LU-105265-1

Air performance measured according to ISO 5801 installation category A. For detailed information on the measurement setup, contact ebm-papst. Intake sound level: Sound power level according to ISO 13347 / sound pressure level measured at 1 m distance from fan axis. The values given are valid under the specified measuring conditions and may vary due to conditions of installation. For deviations from the standard configuration, the parameters have to be checked on the installed unit.

Measured values

	U	f	n	P_e	I	qv	p_{fs}	qv	p_{fs}
	V	Hz	min^{-1}	W	A	m^3/h	Pa	CFM	inH2O
1	230	60	1800	200	0.88	565	100	335	0.40
2	230	60	2310	181	0.78	425	200	250	0.80
3	230	60	2685	170	0.74	300	300	175	1.20
4	230	60	2945	159	0.70	180	375	105	1.51

U = Power supply · f = Frequency · n = Speed (rpm) · P_e = Power consumption · I = Current draw · qv = Air flow · p_{fs} = Pressure increase

ebm-papst Mulfingen GmbH & Co. KG · Bachmühle 2 · D-74673 Mulfingen · Phone +49 (0) 7938 81-0 · Fax +49 (0) 7938 81-110 · info1@de.ebmpapst.com · www.ebmpapst.com