ACI 4420 H

EC axial fan



ebm-papst St. Georgen GmbH & Co. KG
Hermann-Papst-Str. 1
D-78112 St. Georgen
Phone +49 (0) 7724 81-0
Fax +49 (0) 7724 81-1309
info2@de.ebmpapst.com
www.ebmpapst.com

Nominal data

Type	ACI 4420 H	
Phase		1~
Nominal voltage	VAC	230
Nominal voltage range	VAC	195 .. 265
Speed	min^{-1}	3000
Power input	W	3.3
Min. ambient temperature	°C	-20
Max. ambient temperature	°C	75
Air flow	m^3/h	160
Sound power level	B	5.1
Sound pressure level	dB(A)	39

ml = Max. load · me = Max. efficiency · fa = Running at free air · cs = Customer specs · cu = Customer unit
Subject to alterations

Technical features

General description	Completely integrated converter and fan electronics
Housing material	Fibreglass-reinforced plastic (PBT)
Impeller material	Fibreglass-reinforced plastic (PA)
Mass	0.25 kg
Dimensions	119 x 119 x 38 mm
Direction of air flow	Exhaust over struts
Direction of rotation	Clockwise, looking at rotor
Bearing	Ball bearing
Lifetime L10 at 40 °C	65000 h
Lifetime L10 at maximum temperature	25000 h
Connection line	Via 2 flat plugs 2,8 x 0,5 mm flying leads optional

ebm-papst St. Georgen GmbH & Co. KG · Hermann-Papst-Str. 1 · D-78112 St. Georgen · Phone +49 (0) 7724 81-0 · Fax +49 (0) 7724 81-1309 · info2@de.ebmpapst.com · www.ebmpapst.com

Product drawing

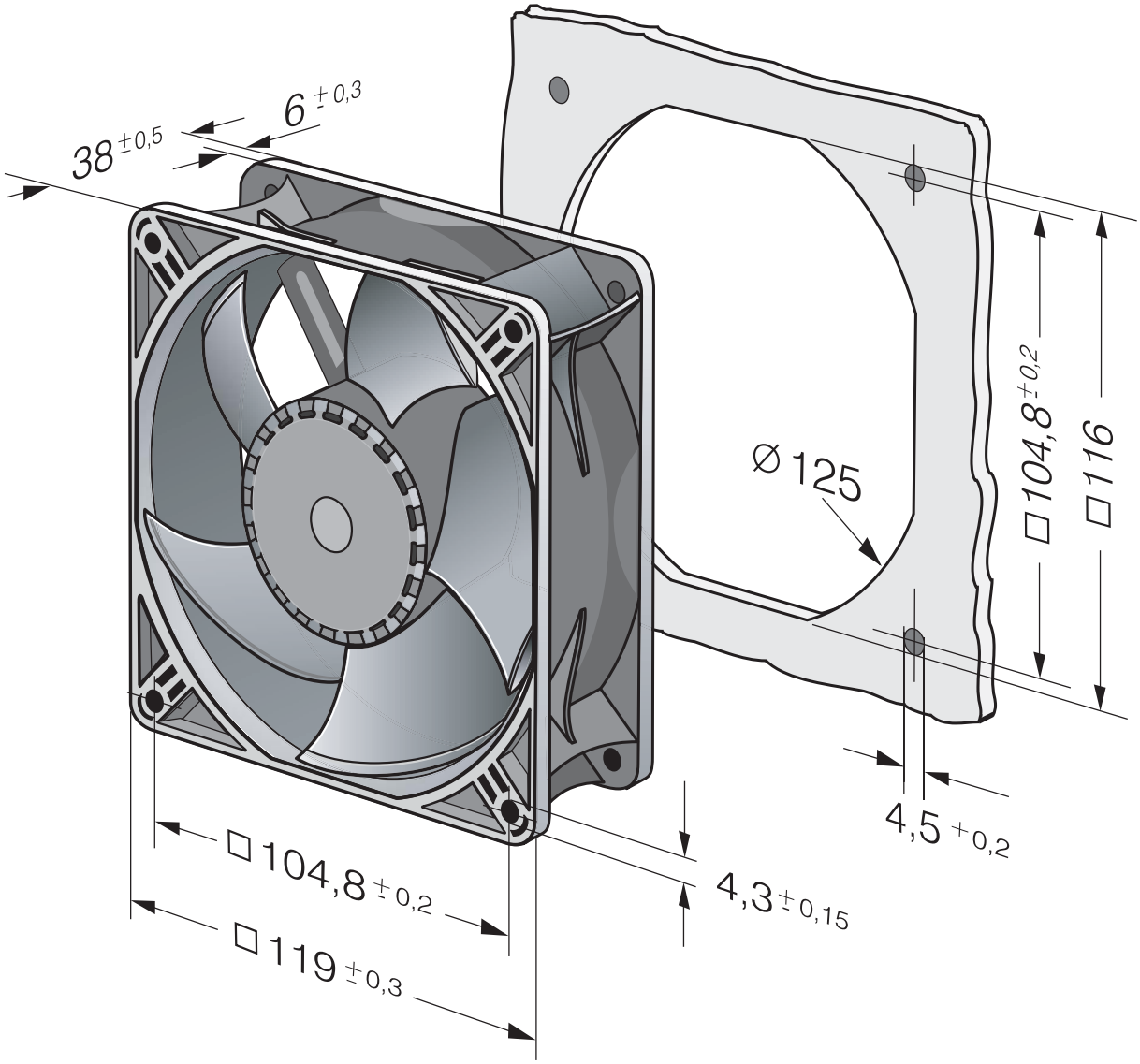

ebm-papst St. Georgen GmbH & Co. KG · Hermann-Papst-Str. 1 · D-78112 St. Georgen · Phone +49 (0) 7724 81-0 · Fax +49 (0) 7724 81-1309 · info2@de.ebmpapst.com · www.ebmpapst.com

EC axial fan

Charts

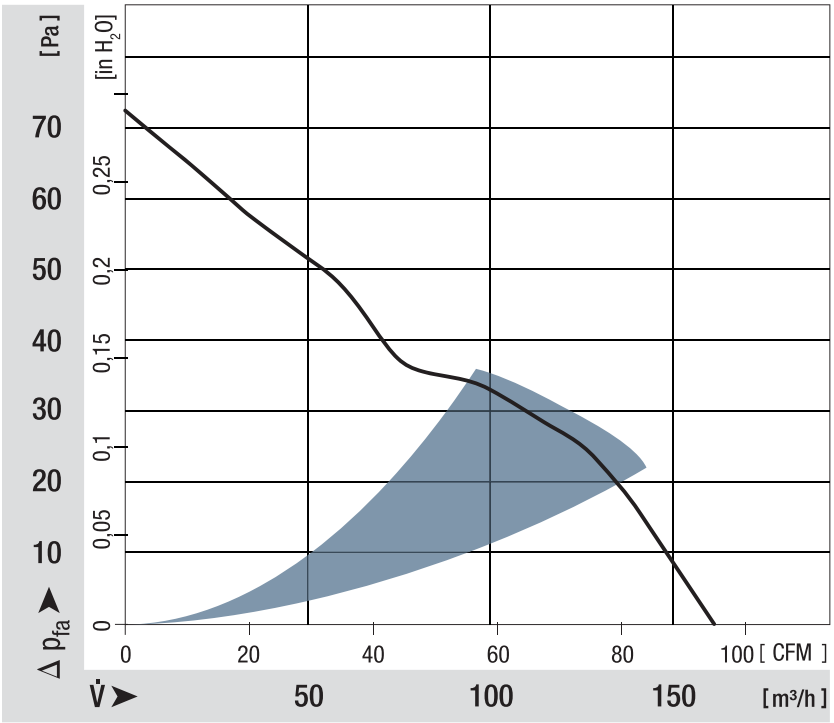

ebm-papst St. Georgen GmbH & Co. KG · Hermann-Papst-Str. 1 · D-78112 St. Georgen · Phone +49 (0) 7724 81-0 · Fax +49 (0) 7724 81-1309 · info2@de.ebmpapst.com · www.ebmpapst.com