5988

AC axial compact fan



ebm-papst St. Georgen GmbH & Co. KG
Hermann-Papst-Str. 1
D-78112 St. Georgen
Phone +49 (0) 7724 81-0
Fax +49 (0) 7724 81-1309
info2@de.ebmpapst.com
www.ebmpapst.com

Nominal data

Type	5988

Phase		1~
Nominal voltage	VAC	230
Frequency	Hz	50
Speed	min^{-1}	2250
Power input	W	13.0
Min. ambient temperature	°C	-30
Max. ambient temperature	°C	55
Air flow	m^3/h	150
Sound power level	B	4.9
Sound pressure level	dB(A)	37

ml = Max. load · me = Max. efficiency · fa = Running at free air · cs = Customer specs · cu = Customer unit
Subject to alterations

AC axial compact fan

Technical features

Mass	0.570 kg
Dimensions	127 x 127 x 38 mm
Material of impeller	Fibreglass-reinforced plastic (PA)
Housing material	Die-cast aluminium
Direction of air flow	Exhaust over struts
Direction of rotation	Left, looking at rotor
Bearing	Ball bearings
Lifetime L10 at 40 °C	35000 h
Lifetime L10 at maximum temperature	20000 h
Connection line	2 flat connectors 2.8 x 0.5 mm. Housing with grounding lug for M4 x 6.
Motor protection	Protected from overload using impedance protection
Approval	VDE, CSA, UL, CE

ebm-papst St. Georgen GmbH & Co. KG · Hermann-Papst-Str. 1 · D-78112 St. Georgen · Phone +49 (0) 7724 81-0 · Fax +49 (0) 7724 81-1309 · info2@de.ebmpapst.com · www.ebmpapst.com

AC axial compact fan

Product drawing

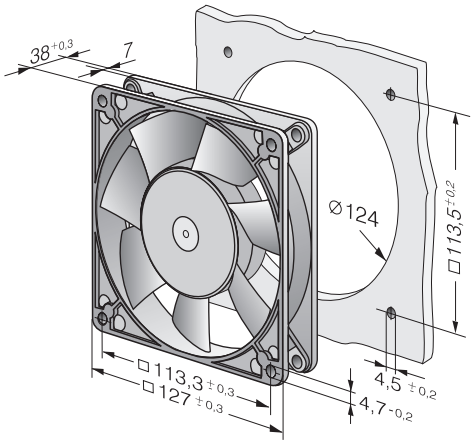

ebm-papst St. Georgen GmbH & Co. KG · Hermann-Papst-Str. 1 · D-78112 St. Georgen · Phone +49 (0) 7724 81-0 · Fax +49 (0) 7724 81-1309 · info2@de.ebmpapst.com · www.ebmpapst.com

AC axial compact fan

Charts: Air flow

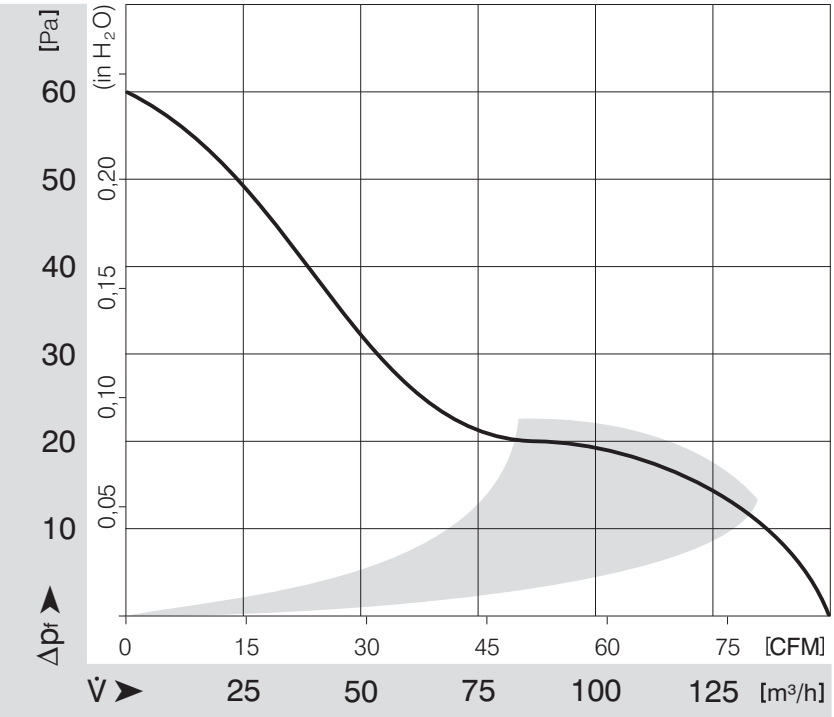

ebm-papst St. Georgen GmbH & Co. KG · Hermann-Papst-Str. 1 · D-78112 St. Georgen · Phone +49 (0) 7724 81-0 · Fax +49 (0) 7724 81-1309 · info2@de.ebmpapst.com · www.ebmpapst.com