Product Data Sheet 4856 ZWU

ebmpapst

The engineer's choice



GREEN TECH

4856 ZWU

INDEX

1 General 3

2 Mechanics 3

2.1 General 3
2.2 Connections 4

3 Operating Data 5

3.1 Electrical Operating Data 5
3.2 Electrical Features 6
3.3 Aerodynamics 6
3.4 Sound Data 8

4 Environment 8

4.1 General 8
4.2 Climatic Requirements*) 8

5 Safety 9

5.1 Electrical Safety 9
5.2 Approval Tests 9

6 Reliability 9

6.1 General 9

1 General

Fan type	Fan
Rotating direction looking at rotor	Clockwise
Airflow direction	Air outlet over struts
Bearing system	Ball bearing
Mounting position - shaft	Any
Balancing grade	2,5

2 Mechanics

2.1 General

Width	119,0 mm	
Height	119,0 mm	
Depth	38,0 mm	
Diameter	0,0 mm	
Mass	0,540 kg	
Housing material	Metal	
Impeller material	Metal	
Max. torque when mounted across both mounting flanges Screw size	Wire outlet corner: 120 Ncm Remaining corners: 350 Ncm ISO 4762 - M4 degreased, without an additional brace and without washer	

2.2 Connections

Electrical connection	Wires	
Lead wire length Tolerance	L = 310,0 mm +- 10,0 mm	
Tube length Tolerance	See drawing	
Wire size (AWG)	18	
Insulation diameter	2,06 mm	
Plug	See drawing	
Contact	See drawing	





	Color	Operation
1	black	L
2	black	N

3 Operating Data

3.1 Electrical Operating Data

Measurement conditions:	Normal air density = 1,2 kg/m3; Temperature 23°C +/- 3°C; Motor axis horizontal;warm-up time before measuring 5 minutes (unless otherwise specified). In the intake and outlet area should not be any solid obstruction within 0,5 m.

$\Delta p = 0$: corresp. to free air flow (see chapter aerodynamics)
I: corresp. to RMS line current

Features	Condition	Symbol	Values	
Frequency	$\Delta p = 0$	f	50 Hz	60 Hz
Nominal voltage Tolerance	$\Delta p = 0$	U_N	230 V + 6 % - 10 %	230 V + 6 % - 10 %
Power consumption Tolerance	$\Delta p = 0$	P	13 W +- 10 %	12 W +- 10 %
Speed Tolerance	$\Delta p = 0$	n	1.700 1/min +- 10 %	1.800 1/min +- 10 %

3.2 Electrical Features

Locked rotor protection	Impedance
Locked rotor current at	

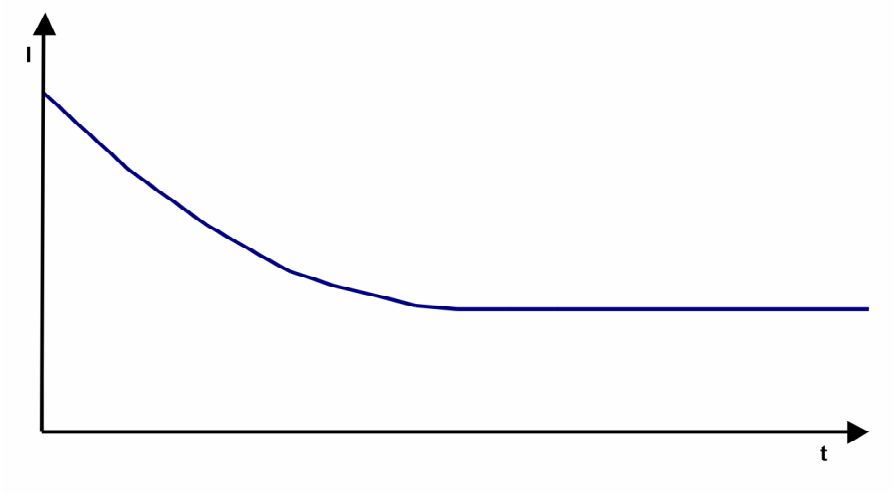

3.3 Aerodynamics

Measurement conditions:

Measured with a double chamber intake rig acc. to DIN EN ISO 5801.
Normal air density = 1,2 kg/m3; Temperature 23℃ +/ - 3℃;
In the intake and outlet area should not be any solid obstruction within 0,5 m. Motor shaft horizontal.
The information is only valid under the specified test conditions and may be changed by the installation conditions. If there are deviations from the standard test conditions, the characteristic values must be checked under the installed conditions.

a.) Operation condition:
1.700 1/min at free air flow Frequency: 50 Hz

Max. free-air flow (Δp = 0 / $\dot{V}$ = max.)	98,0 m3/h
Max. static pressure (Δp = max. / $\dot{V}$ =0)	27 Pa

b.) Operation condition:
1.800 1/min at free air flow Frequency: 60 Hz

Max. free-air flow (Δp = 0 / $\dot{V}$ = max.)	104,0 m3/h
Max. static pressure (Δp = max. / $\dot{V}$ =0)	24 Pa

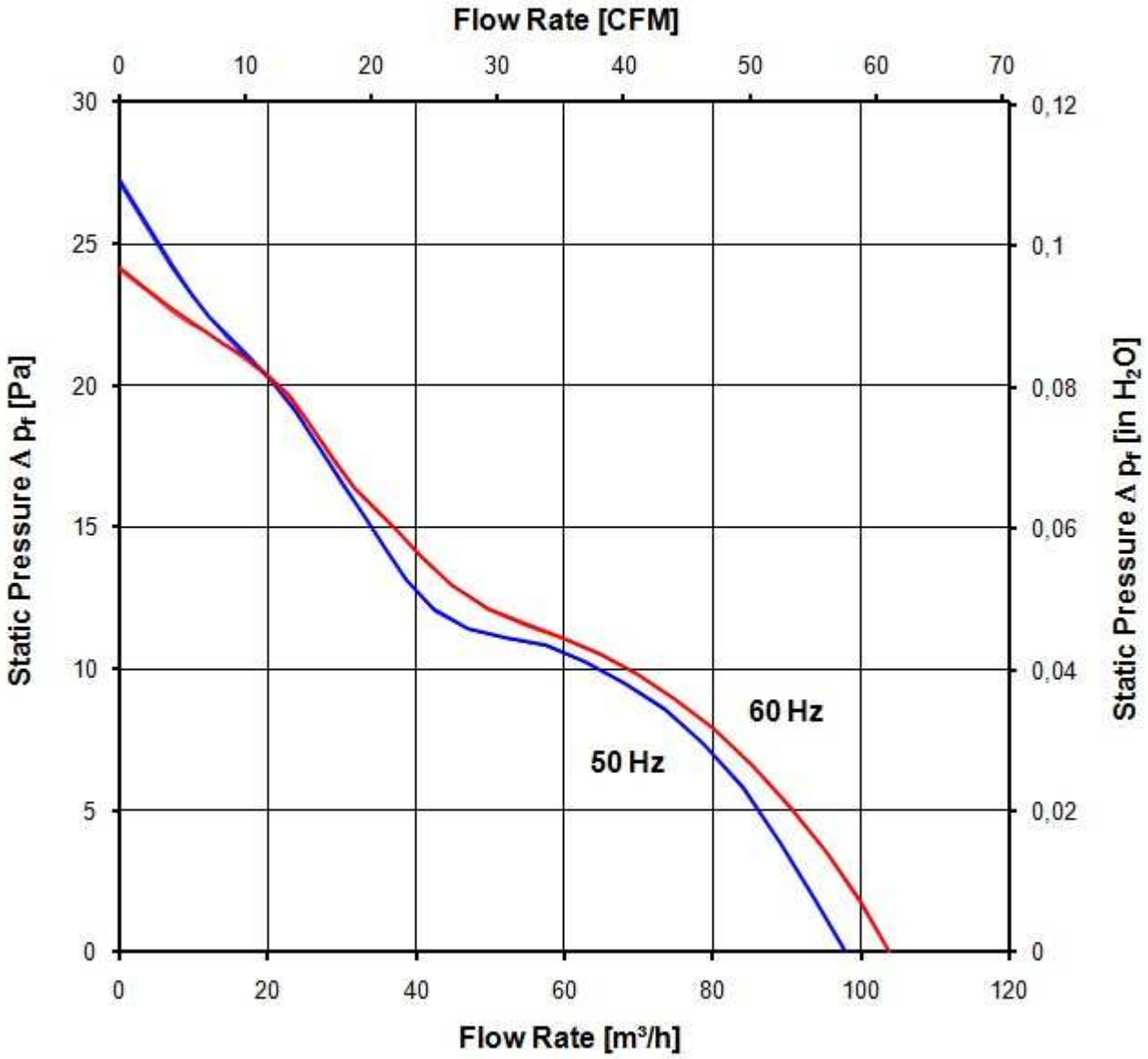
Flow Rate [CFM]
0
10
20
30
40
50
60
70
30
25
20
15
10
5
0
0,12
0,1
0,08
0,06
0,04
0,02
0
Static Pressure Δ pf [Pa]
Static Pressure Δ pf [in H2O]
60 Hz
50 Hz
0
20
40
60
80
100
120
Flow Rate [m³/h]

3.4 Sound Data

Measurement conditions:	Sound pressure level: 1 meter distance between microphone and the air intake. Sound power level: Acc. to DIN 45635 part 38 (ISO 10302)Sound power level: Acc. to DIN 45635 part 38 (ISO 10302) Measured in a semianchoic chamber with a background noise level of Lp(A) < 5 dB(A) For further measurement conditions see chapter aerodynamics.

a.) Operation condition:
1.700 1/min at free air flow Frequency: 50 Hz

Optimal operating point	86,0 m3/h @ 5 Pa	
Sound power level at the optimal operating point	3,8 bel(A)	
Sound pressure level at free air flow, measured in rubber bands	25,0 dB(A)	

b.) Operation condition:
1.800 1/min at free air flow Frequency: 60 Hz

Optimal operating point	89,0 m3/h @ 5 Pa	
Sound power level at the optimal operating point	3,9 bel(A)	
Sound pressure level at free air flow, measured in rubber bands	27,0 dB(A)	

4 Environment

4.1 General

Min. permitted ambient temperature TU min.	-40 ℃ / 50 Hz -40 ℃ / 60 Hz	
Max. permitted ambient temperature TU max.	70 ℃ / 50 Hz 70 ℃ / 60 Hz	
Min. permitted storage temperature TL min.	-40 ℃	
Max. permitted storage temperature TL max.	80 ℃	

4.2 Climatic Requirements*)

IP-protection type (certified)	IP 65 (for fan only, not for connector if applicable) **)	
Humidity requirements	humid temperature, cyclic; according to DIN EN 60068-2-38, 10 cycle and condensation water check; according to DIN EN ISO 6270-2, 14 days	
Salt fog requirements	None	

Permitted application area:
The product is for the use in partial sheltered rooms or open, roofed areas. Direct exposure to water is allowed provided that this does not prevent the normal operation. Saline ambient conditions must be avoided.

Pollution degree 3 (according DIN EN 60664-1)
It occurs conductive pollution or dry non-conductive pollution which becomes conductive due to condensation.

**) The specification of the IP protection refers to the conditions mentioned in certification of the fan. The above mentioned short description of the protection scope is not final. For detailed information of the respective protection scope and definitions, see certification as well as DIN EN 60529 (protection by housings) and ISO 20653 (for vehicles) with the letter K.

Short description of the IP-protection type:
Solid particle Protection: Dust tight.
Protection against deliberate contact: Protected against contact to hazardous parts with a wire.
Protection against water: Protected against water jets.

5 Safety

5.1 Electrical Safety

Dielectric strength DIN EN 60950 (VDE 0805) and DIN EN 60335 (VDE 0700) A.) Type test Measuring conditions: After 48h of storage at 95% R.H. and 25℃. No arcing or breakdown is allowed! All connections together to ground. B.) Routine test Measuring conditions: At indoor climate. No arcing or breakdown is allowed! All connections together to ground.	 1500 VAC / 1 Min. 1500 VAC / 1 Sec.
Isolation resistance Measuring conditions: After 48h of storage at 95% R.H. and 25℃ measured with U=500 VDC for 1 min.	RI > 50 MOhm
Clearance / creepage distance	2,0 mm / 1,8 mm
Protection class	I

5.2 Approval Tests

CE	EC Declaration of Conformity	Yes
EAC	Eurasian Conformity	Yes
UL	Underwriters Laboratories	Yes / UL507, Electric Fans
VDE	Association for Electrical, Electronic and Information Technologies	Yes / Approval acc. to EN 60950 (VDE 0805) - Information technology equipment
CSA	Canadian Standards Association	Yes / C22.2 No. 113 Fans and Ventilators
CCC	China Compulsory Certification	Yes / GB 12350 Safety Requirements for small Power Motors

The approval tests are observed to:
U approval max.: 230 V / f: 60 Hz @ TU approval max.: 85 ℃

6 Reliability

6.1 General

Life expectancy L10 at TU = 40 ℃	50.000 h / 50 Hz	

Life expectancy L10 at TU max.	22.500 h / 50 Hz	

Copying of this document, and giving it to others and the use or communication of the contents thereof, are forbidden without express authority. Offenders are liable to the payment of damages. All rights are reserved in the event of the grant of a patent or the registration of a utility model or design.

Schutzvermerk nach DIN ISO 16016 beachten/
Refer to protection notice DIN ISO 16016!

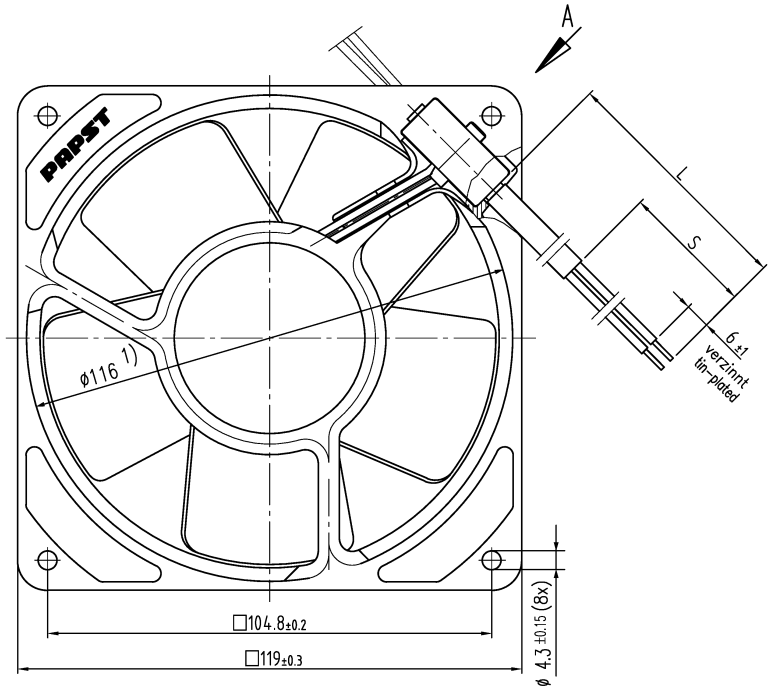

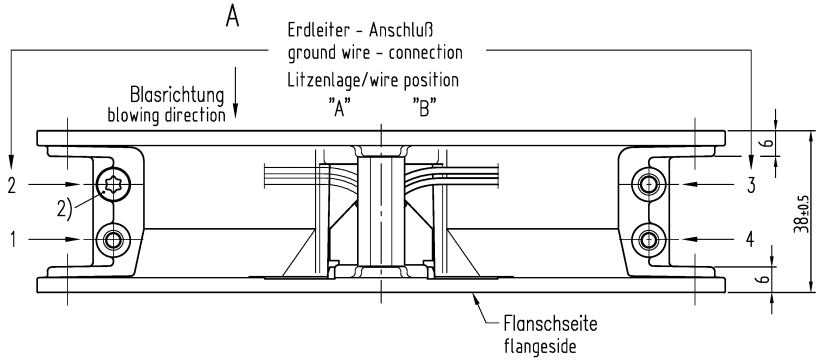

Anzahl und Länge der Litzen sowie
Schlauchlänge, Litzenlage und Erdleiter-Anschluß s.Spezifikation

length and number of wires and of tube length,
wires length and ground wire -connection see design specification

1) Maße für Montagewand
2) Schraube: Duo-Taptite nach DIN 7500,
CM 4x8, Torx

1) dimensions for assembly wall
2) Screw: Duo-Taptite to DIN 7500,
CM 4x8, Torx

Axialspiel bei
- Kugellagerung (K): 0 (mit Federausgleich)
- Gleitlagerung (G): 0.1 - 0.6
- Gleitlagerung (GF): 0 (mit Federausgleich)

axial clearance by
- ball bearing (K): 0 (with spring compensation)
- sleeve bearing (G): 0.1 - 0.6
- sleeve bearing (GF): 0 (with spring compensation)

			ebmpapst	Werkstoff/Material:	Volumen/Volume (mm³):
SAP-Status/State	Aend.-Nr./Change-No.	AutoCAD-System-Version	CAD-Umgebung/ CAD-Enviroment		Gewicht/Mass (g):
		Datum/Date	Name/Name		
Tolerierung/Tolerances:		Bearb./ Drawn		Artikel/Title	
		Gepr./ Checked			
Allgemeintoleranzen/Gen. tolerances:		Freig./ Releas.			
		ebmpapst		Zchg.-Nr./ Drawing.-No.:	Ers.f.Zchg./ Replaces:
		ebm-papst St. Georgen GmbH & Co. KG		Dokumenttyp/Type of Document / Teildokument (Blatt/Page) / Index/Index / Format/Size: / Massstab/scale	

11/09