4856 Z

AC axial compact fan



ebm-papst St. Georgen GmbH & Co. KG
Hermann-Papst-Str. 1
D-78112 St. Georgen
Phone +49 (0) 7724 81-0
Fax +49 (0) 7724 81-1309
info2@de.ebmpapst.com
www.ebmpapst.com

Nominal data

Type	4856 Z	
Phase		1~
Nominal voltage	VAC	230
Frequency	Hz	50
Speed (rpm)	min^{-1}	1700
Power consumption	W	13.0
Min. ambient temperature	°C	-40
Max. ambient temperature	°C	75
Air flow	m^3/h	100
Sound power level	B	4.0
Sound pressure level	dB(A)	26

ml = Max. load · me = Max. efficiency · fa = Free air · cs = Customer specification · ce = Customer equipment
Subject to change

AC axial compact fan

Technical description

Weight	0.540 kg
Dimensions	119 x 119 x 38 mm
Impeller material	Sheet steel, painted black
Housing material	Die-cast aluminum
Airflow direction	Exhaust over struts
Direction of rotation	Clockwise, viewed toward rotor
Storage	Ball bearing
Service life L10 at 40 °C	50000 h
Service life L10 at maximum temperature	20000 h
Cable	2 flat plugs 2.8 x 0.5 mm. Housing with grounding lug for M4 x 8.
Motor protection	Protected from overload by impedance protection
Approval	VDE, CSA, UL, CE
Option	Electrical hookup to leads, 310 mm long, is available.

ebm-papst St. Georgen GmbH & Co. KG · Hermann-Papst-Str. 1 · D-78112 St. Georgen · Phone +49 (0) 7724 81-0 · Fax +49 (0) 7724 81-1309 · info2@de.ebmpapst.com · www.ebmpapst.com

AC axial compact fan

Product drawing

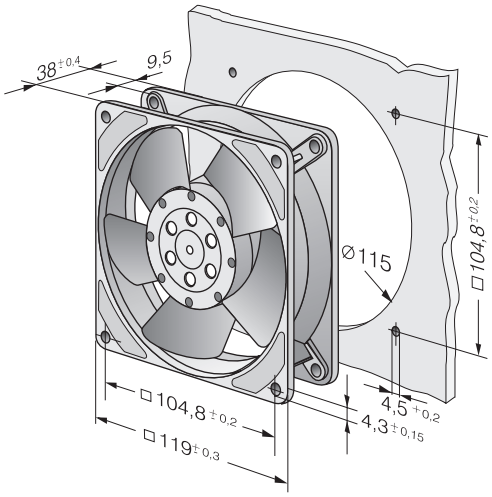

ebm-papst St. Georgen GmbH & Co. KG · Hermann-Papst-Str. 1 · D-78112 St. Georgen · Phone +49 (0) 7724 81-0 · Fax +49 (0) 7724 81-1309 · info2@de.ebmpapst.com · www.ebmpapst.com

AC axial compact fan

Curves: Air performance

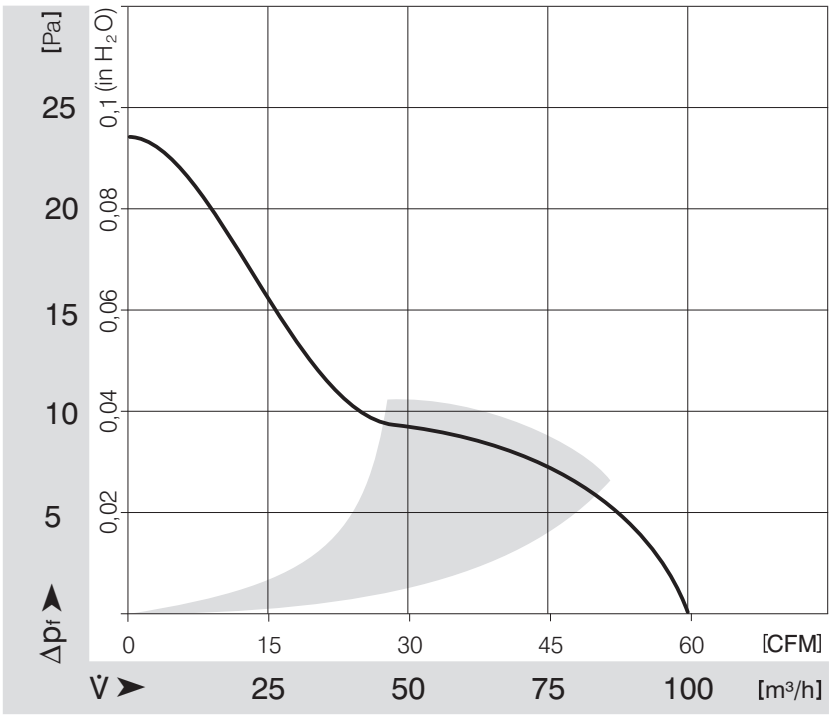

ebm-papst St. Georgen GmbH & Co. KG · Hermann-Papst-Str. 1 · D-78112 St. Georgen · Phone +49 (0) 7724 81-0 · Fax +49 (0) 7724 81-1309 · info2@de.ebmpapst.com · www.ebmpapst.com