# AC axial compact fan



**ebm-papst St. Georgen GmbH & Co. KG**
Hermann-Papst-Str. 1
D-78112 St. Georgen
Phone +49 (0) 7724 81-0
Fax +49 (0) 7724 81-1309
info2@de.ebmpapst.com
www.ebmpapst.com

## Nominal data

| Type | 4656 Z | |
|---|---|---|
| Phase | | 1~ |
| Nominal voltage | VAC | 230 |
| Frequency | Hz | 50 |
| Speed | $min^{-1}$ | 2650 |
| Power input | W | 19.0 |
| Min. ambient temperature | °C | -40 |
| Max. ambient temperature | °C | 75 |
| Air flow | $m^3/h$ | 160 |
| Sound power level | B | 5.3 |
| Sound pressure level | dB(A) | 40 |

ml = Max. load · me = Max. efficiency · fa = Running at free air · cs = Customer specs · cu = Customer unit
Subject to alterations

## Technical features

| | |
|---|---|
| **Mass** | 0.540 kg |
| **Dimensions** | 119 x 119 x 38 mm |
| **Material of impeller** | Sheet steel, coated in black |
| **Housing material** | Die-cast aluminium |
| **Direction of air flow** | Exhaust over struts |
| **Direction of rotation** | Right, looking at rotor |
| **Bearing** | Ball bearings |
| **Lifetime L10 at 40 °C** | 37500 h |
| **Lifetime L10 at maximum temperature** | 17500 h |
| **Connection line** | 2 flat connectors 2.8 x 0.5 mm. Housing with grounding lug for M4 x 8. |
| **Motor protection** | Protected from overload using impedance protection |
| **Approval** | VDE, CSA, UL, CE |



ebm-papst St. Georgen GmbH & Co. KG · Hermann-Papst-Str. 1 · D-78112 St. Georgen · Phone +49 (0) 7724 81-0 · Fax +49 (0) 7724 81-1309 · info2@de.ebmpapst.com · www.ebmpapst.com

# AC axial compact fan

## Product drawing

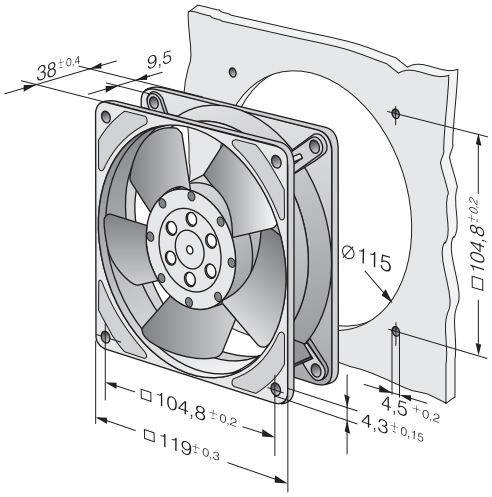




ebm-papst St. Georgen GmbH & Co. KG · Hermann-Papst-Str. 1 · D-78112 St. Georgen · Phone +49 (0) 7724 81-0 · Fax +49 (0) 7724 81-1309 · info2@de.ebmpapst.com · www.ebmpapst.com

# AC axial compact fan

## Charts: Air flow

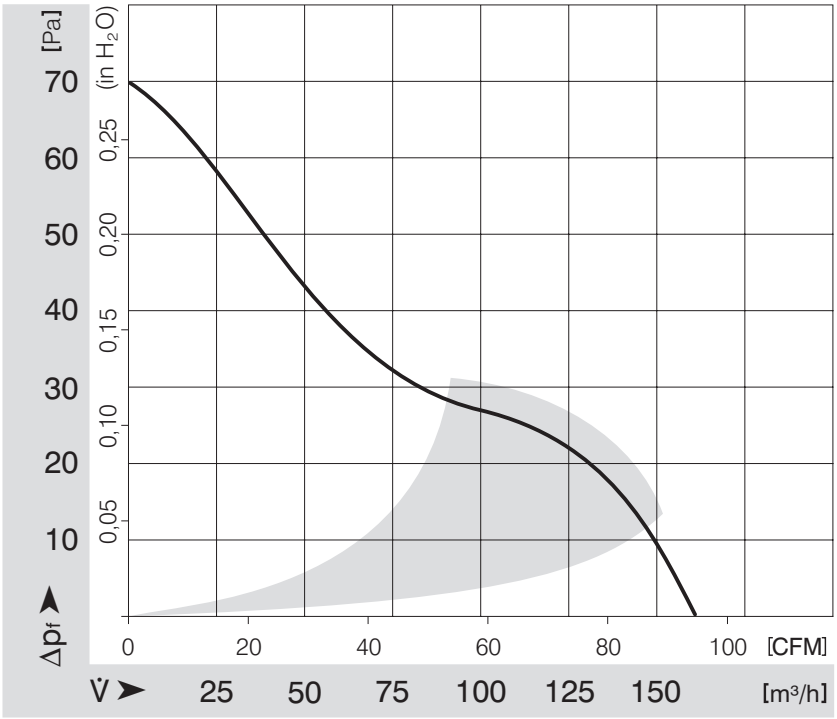




ebm-papst St. Georgen GmbH & Co. KG · Hermann-Papst-Str. 1 · D-78112 St. Georgen · Phone +49 (0) 7724 81-0 · Fax +49 (0) 7724 81-1309 · info2@de.ebmpapst.com · www.ebmpapst.com

# Mouser Electronics

Authorized Distributor

Click to View Pricing, Inventory, Delivery & Lifecycle Information:

ebm-papst:
4656ZH