**4312 MT**

# DC axial fan



**ebm-papst St. Georgen GmbH & Co. KG**
Hermann-Papst-Str. 1
D-78112 St. Georgen
Phone +49 (0) 7724 81-0
Fax +49 (0) 7724 81-1309
info2@de.ebmpapst.com
www.ebmpapst.com

## Nominal data

| Type | 4312 MT | |
|---|---|---|
| Nominal voltage | VDC | 12 |
| Nominal voltage range | VDC | 8 .. 15 |
| Speed (rpm) | $min^{-1}$ | 2300 |
| Power consumption | W | 3.3 |
| Min. ambient temperature | °C | -20 |
| Max. ambient temperature | °C | 65 |
| Air flow | $m^3/h$ | 138 |
| Sound power level | B | 5.3 |
| Sound pressure level | dB(A) | 39 |

ml = Max. load · me = Max. efficiency · fa = Free air · cs = Customer specification · ce = Customer equipment
Subject to change

## Technical description

| | |
|---|---|
| **Housing material** | Glass-fiber reinforced PBT plastic |
| **Impeller material** | Glass-fiber reinforced PA plastic |
| **Weight** | 0.22 kg |
| **Dimensions** | 119 x 119 x 32 mm |
| **Airflow direction** | Exhaust over struts |
| **Direction of rotation** | Clockwise, viewed toward rotor |
| **Storage** | Ball bearing |
| **Service life L10 at 40 °C** | 70000 h |
| **Service life L10 at maximum temperature** | 40000 h |
| **Cable** | With leads AWG 22, TR 64 |



ebm-papst St. Georgen GmbH & Co. KG · Hermann-Papst-Str. 1 · D-78112 St. Georgen · Phone +49 (0) 7724 81-0 · Fax +49 (0) 7724 81-1309 · info2@de.ebmpapst.com · www.ebmpapst.com

# DC axial fan

## Product drawing

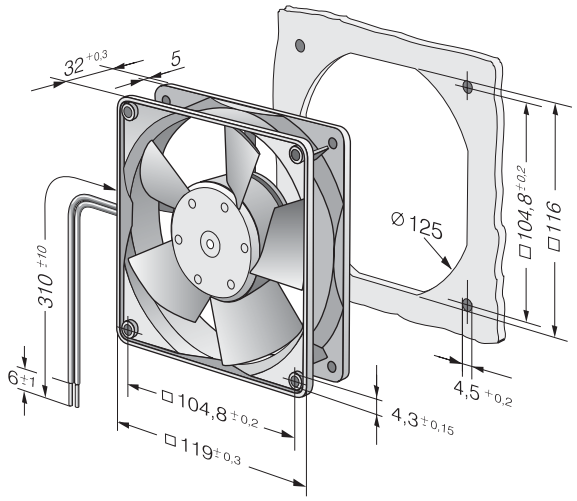




ebm-papst St. Georgen GmbH & Co. KG · Hermann-Papst-Str. 1 · D-78112 St. Georgen · Phone +49 (0) 7724 81-0 · Fax +49 (0) 7724 81-1309 · info2@de.ebmpapst.com · www.ebmpapst.com

# DC axial fan

## Curves

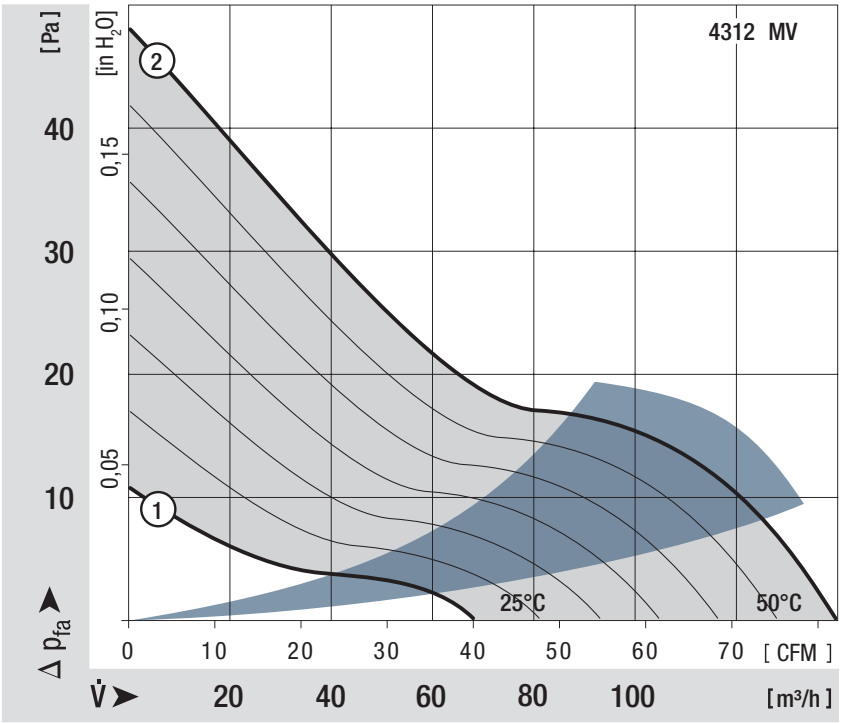




ebm-papst St. Georgen GmbH & Co. KG · Hermann-Papst-Str. 1 · D-78112 St. Georgen · Phone +49 (0) 7724 81-0 · Fax +49 (0) 7724 81-1309 · info2@de.ebmpapst.com · www.ebmpapst.com