

3400 Series Tubeaxial

92x92x25mm

- DC fans with electronically commutated external rotor motor. Fully integrated commutation electronics.
- With electronic protection against reverse polarity, blocking and overloading; partially impedance protected.
- Mounting from either face using four 4.3 mm holes.
- Fan of fiberglass reinforced plastic. PBTP housing, PA impeller.
- Air exhaust over struts. Rotational direction CCW looking at rotor.
- Electrical connection via 2 leads AWG 24, TR 64. Stripped and tinned ends.
- UL, CSA, VDE approvals on some models, please contact application engineering.

Part Number	Curve	CFM @ 0	VDC	Volt. Range	Power (W)	dBA	Max Amb. Temp C	Bearing Type	Features	Wgt. (lbs)
3412GL	1	36	12	7 to 15	1.3	26	75	Sleeve	Leads	0.31
3412L	1	36	12	7 to 15	1.3	27	75	Ball	Leads	0.31
3412GM	2	42	12	7 to 15	1.8	32	75	Sleeve	Leads	0.31
3412M	2	42	12	7 to 15	1.8	32	75	Ball	Leads	0.31
3412/2	3	49	12	7 to 15	2.4	36	75	Ball	Leads	0.31
3412G	3	49	12	7 to 15	2.4	36	75	Sleeve	Leads	0.31
3412	3	49	12	7 to 15	2.4	36	75	Ball	Leads	0.31
3412GH	4	55	12	7 to 15	3.4	39	75	Sleeve	Leads	0.31
3414GL	1	36	24	12 to 28	1.4	26	75	Sleeve	Leads	0.31
3414L	1	36	24	12 to 28	1.4	27	75	Ball	Leads	0.31
3414GM	2	42	24	12 to 28	1.8	32	75	Sleeve	Leads	0.31
3414M	2	42	24	12 to 28	1.8	32	75	Ball	Leads	0.31

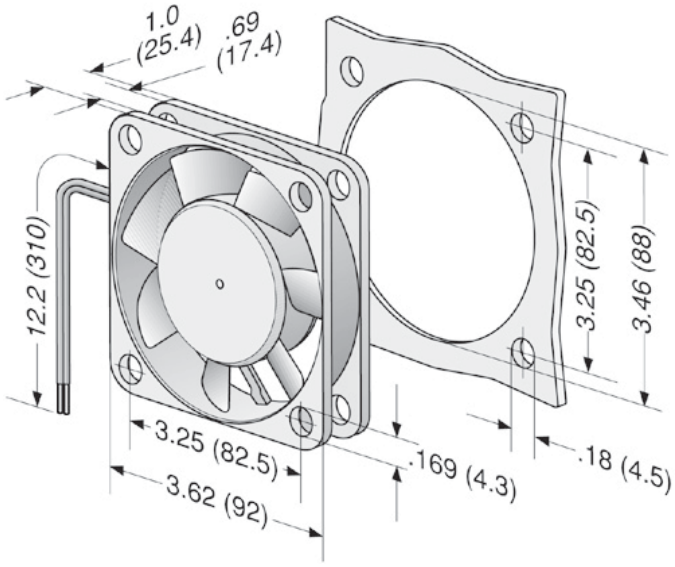

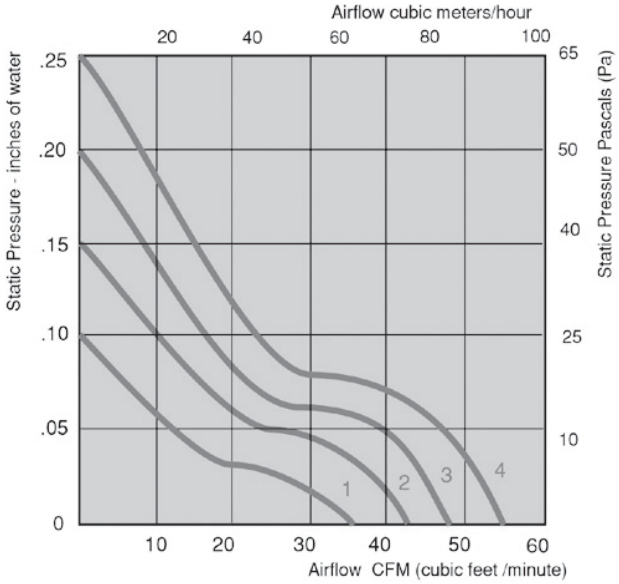

ebmpapst

e-mail: sales@us.ebmpapst.com · TEL: 860-674-1515 · FAX: 860-674-8536
ebm-papst Inc., 100 Hyde Road, Farmington, CT 06034 USA
ebm-papst Inc., 2004 © ebm-papst Inc. reserves the right to change any specifications or data without notice



3400 Series cont. Tubeaxial

92x92x25mm

- DC fans with electronically commutated external rotor motor. Fully integrated commutation electronics.
- With electronic protection against reverse polarity, blocking and overloading; partially impedance protected.
- Mounting from either face using four 4.3 mm holes.
- Fan of fiberglass reinforced plastic. PBTP housing, PA impeller.
- Air exhaust over struts. Rotational direction CCW looking at rotor.
- Electrical connection via 2 leads AWG 24, TR 64. Stripped and tinned ends.
- UL, CSA, VDE approvals on some models, please contact application engineering.

Part Number	Curve	CFM @ 0	VDC	Volt. Range	Power (W)	dBA	Max Amb. Temp C	Bearing Type	Features	Wgt. (lbs)
3414/12	3	49	24	12 to 28	2.6	36	75	Ball	Leads	0.31
3414	3	49	24	12 to 28	2.6	36	75	Ball	Leads	0.31
3414/2	3	49	24	12 to 28	2.6	36	75	Ball	Leads	0.31
3414G	3	49	24	12 to 28	2.4	36	75	Sleeve	Leads	0.31
3414H	4	55	24	12 to 28	3.8	39	75	Ball	Leads	0.31

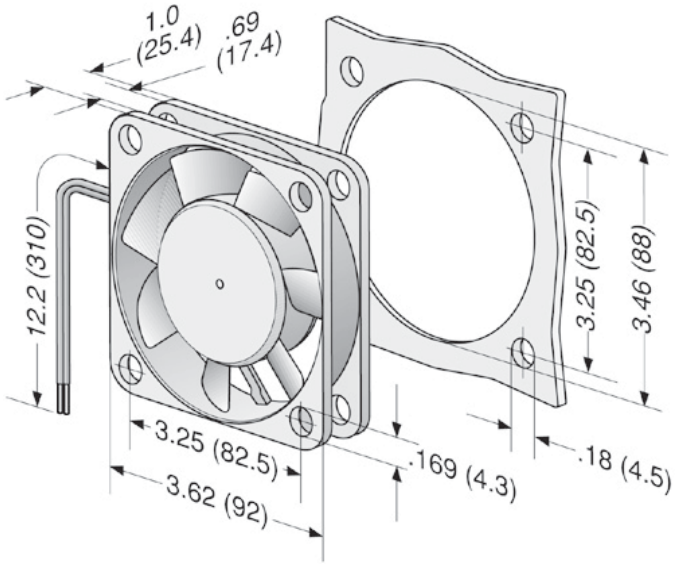

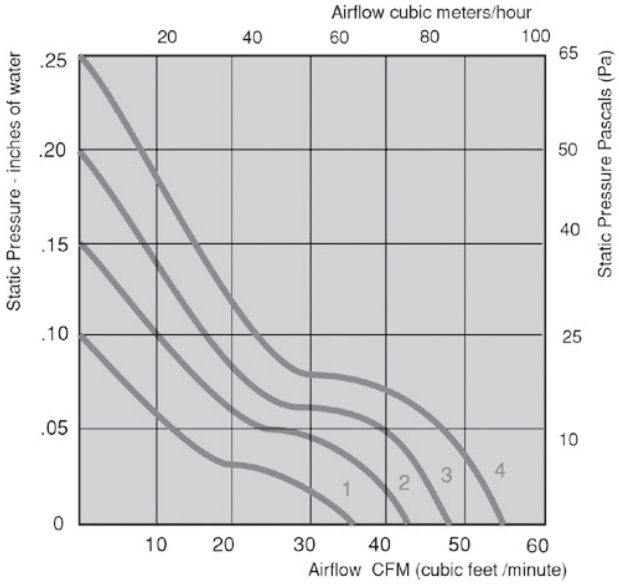

ebmpapst

e-mail: sales@us.ebmpapst.com · TEL: 860-674-1515 · FAX: 860-674-8536
ebm-papst Inc., 100 Hyde Road, Farmington, CT 06034 USA
ebm-papst Inc., 2004 © ebm-papst Inc. reserves the right to change any specifications or data without notice