DISPLAY Elektronik GmbH

DATA SHEET

LCD MODULE

DEM 240320A4 TMH-PW-N

Product Specification ***Version:1***

12.01.2022

GENERAL SPECIFICATION

MODULE NO. :

DEM 240320A4 TMH-PW-N

CUSTOMER

VERSION NO.	CHANGE DESCRIPTION	DATE
0	ORIGINAL VERSION	10.01.2022
1	ADD POLARIZER TYPE	12.01.2022

PREPARED BY: YK DATE: 12.01.2022

APPROVEDBY: WH DATE: 12.01.2022

CONTENTS

1. GENERAL SPECIFICATIONS **2**

2. EXTERNAL DIMENSIONS **3**

3. BLOCK DIAGRAM **4**

4. PIN ASSIGNMENT **5**

5. OPTICAL CHARACTERISTICS **6**

6. ABSOLUTE MAXIMUM RATINGS **9**

7. ELECTRICAL CHARACTERISTICS **9**

8.TIMING CHARACTERISTICS **10**

9. RELIABILITY TEST **11**

10. LCD MODULES HANDLING PRECAUTIONS **12**

11. OTHERS **12**

1. GENERAL SPECIFICATIONS

Item	Contents	Unit
LCD TYPE	TFT/TRANSMISSIVE	
MODULE SIZE	40.30 x 58.10 x2.85	mm
ACTIVE SIZE	33.84 x45.12	mm
PIXEL PITCH	0.141 x 0.141	mm
NUMBER OF DOTS	240 x 320	
DIVER IC	ST7789V2-G4-A	
INTERFACE TYPE	8080 16-BIT,TYPE I,[DB0,DB15]	
TOP POLARIZER TYPE	ANTI-GLARE	
RECOMMEND VIEWING DIRECTION	6	O’CLOCK
GRAY SCALE INVERSION DIRECTION	12	O’CLOCK
COLORS	262K	
BACKLIGHT TYPE	4-DIES WHITE LED	
TOUCH PANEL TYPE	WITHOUT	

2. EXTERNAL DIMENSIONS

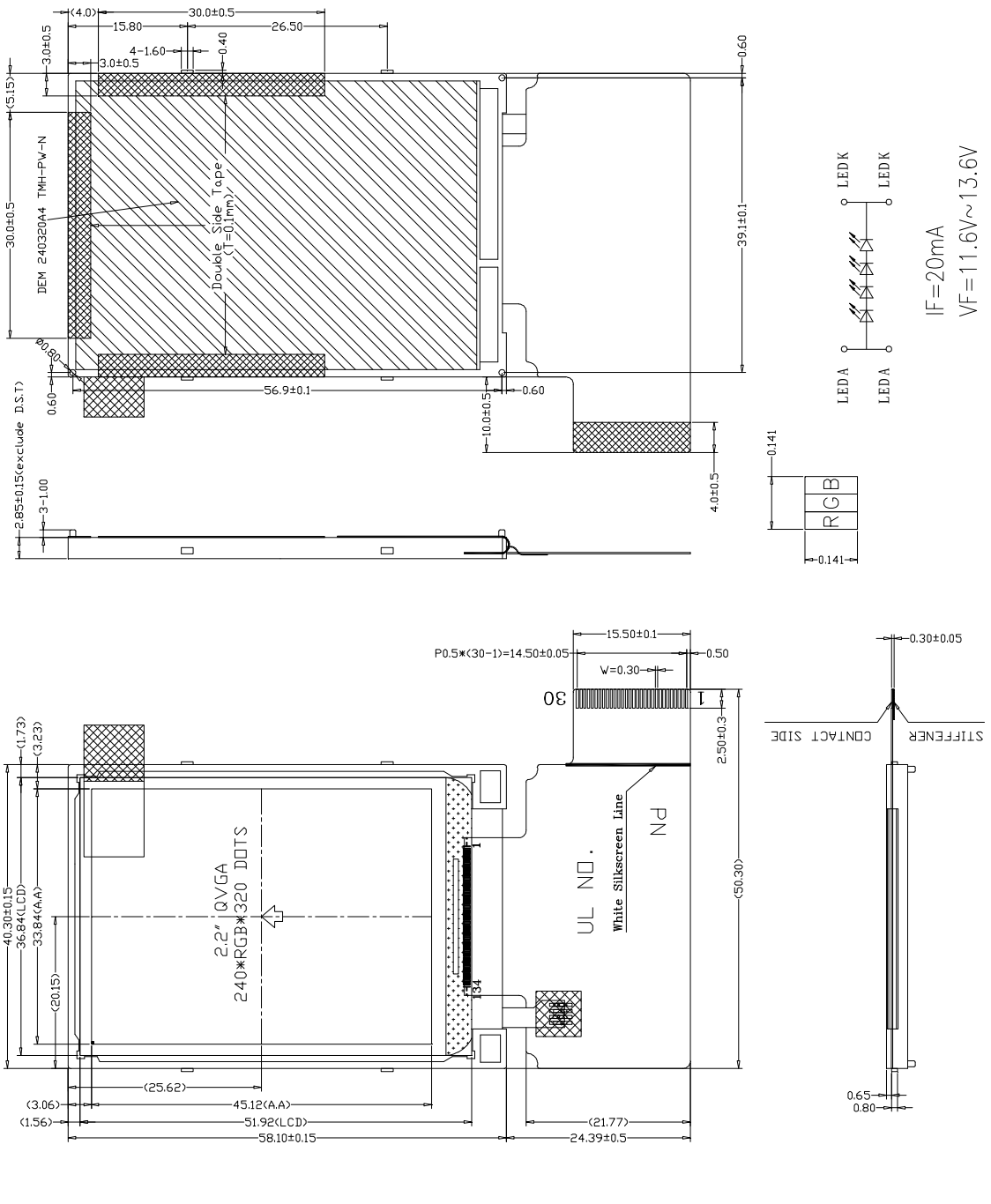

3. BLOCK DIAGRAM

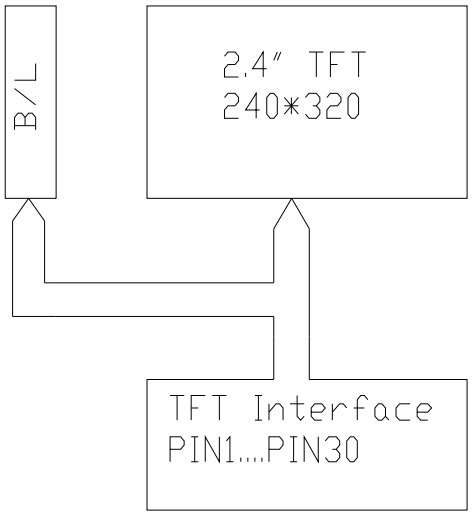

4. PIN ASSIGNMENT

Pin No.	Symbol	Description
1	IOVCC	Power supply for digital circuit
2	VCI	Power supply
3	RD	Read data signal
4	WR	Write data signal
5	RS	Data or command select
6	RESET	Reset pin
7	CS	Chip select input pin (“ Low ” enable).
8	DB0	Data bus
9	DB1	Data bus
10	DB2	Data bus
11	DB3	Data bus
12	DB4	Data bus
13	DB5	Data bus
14	DB6	Data bus
15	DB7	Data bus
16	DB8	Data bus
17	DB9	Data bus
18	DB10	Data bus
19	DB11	Data bus
20	DB12	Data bus
21	DB13	Data bus
22	DB14	Data bus
23	DB15	Data bus
24	DB16	Data bus
25	DB17	Data bus
26	GND	Power ground
27	NC	No connect
28	LEDK	Cathode of LED backlight
29	NC	No connect
30	LEDA	Anode of LED backlight

5. OPTICAL CHARACTERISTICS

ITEM		SYMBOL	CONDITIONS	SPECIFICATIONS			UNIT	NOTE
				MIN	TYP.	MAX		
Luminance		L			280	-	Cd/㎡	
Contrast Ratio		CR	θ =0 °	300	400			
Response Time		Ton+ Toff	25℃		25		ms	
CIE COLOUR COORDINATE	RED	XR	VIEWING NORMAL ANGLE	0.591	0.606	0.621		
		YR		0.316	0.331	0.346		
	GREEN	XG		0.32	0.337	0.352		
		YG		0.512	0.527	0.542		
	BLUE	XB		0.134	0.149	0.164		
		YB		0.080	0.095	0.110		
	WHITE	XW						
		YW						
VIEWING ANGLE	Hor.	θ x+	CR≥10	40	45		Degree	
		θ x-		40	45			
	Ver.	θ y+		45	50			
		θ y-		15	20			
Uniformity	Un				80		%	

Note 1 : Definition of Viewing Angle θ_x and θ_y :

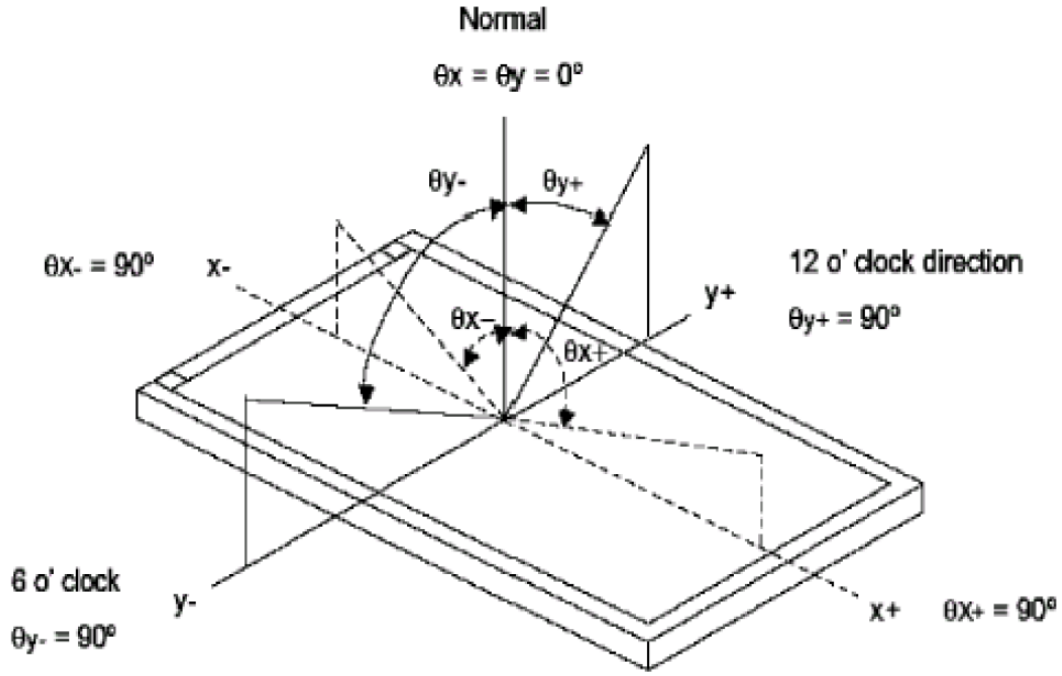

Note 2: Definition of contrast ratio CR:

$$CR = \frac{\text{Brightness of non-selected dots (white)}}{\text{Brightness of selected dots (black)}}$$

Note 3: Definition of response time (T_R, T_F)

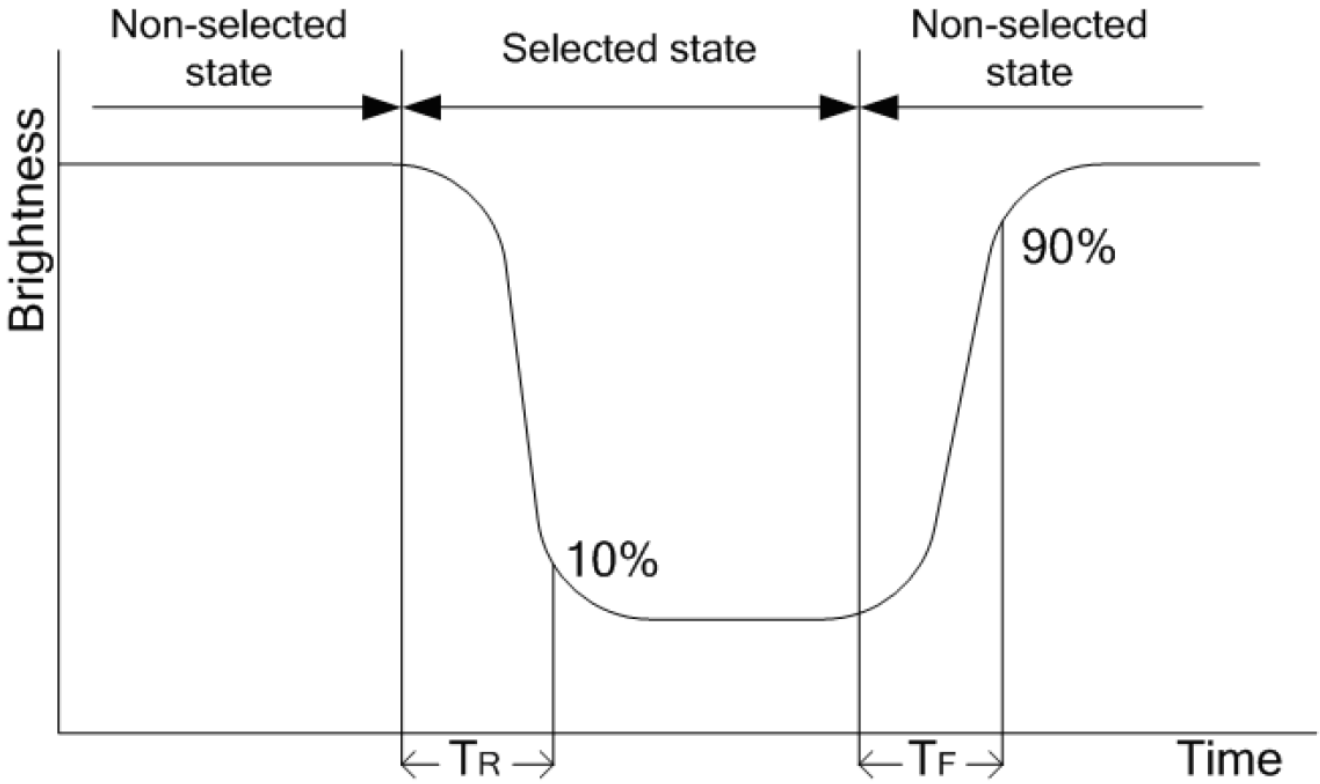

: The brightness test equipment setup

20mA Field=2° (As measuring "black" image, field=2° is the best testing condition)

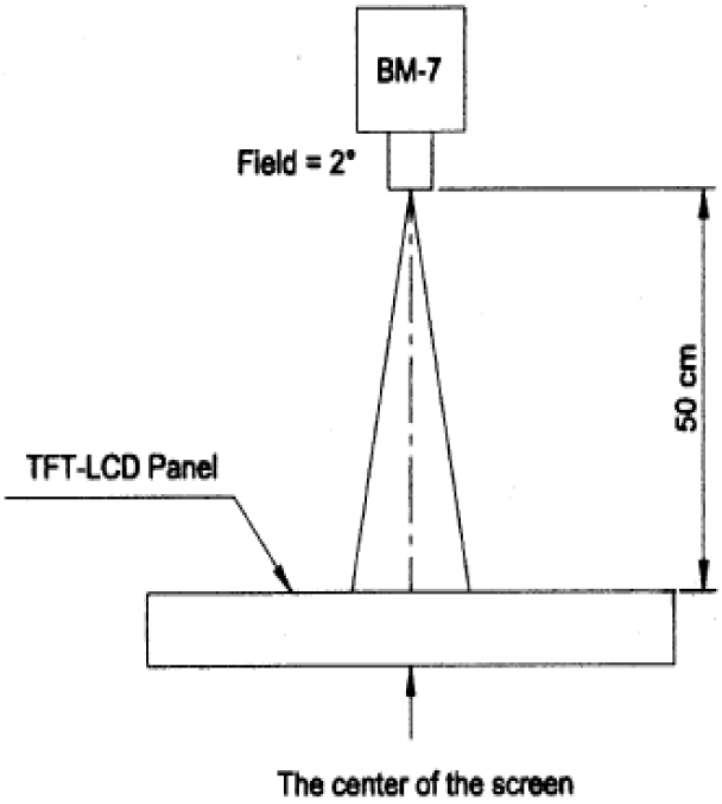

Note 4 :

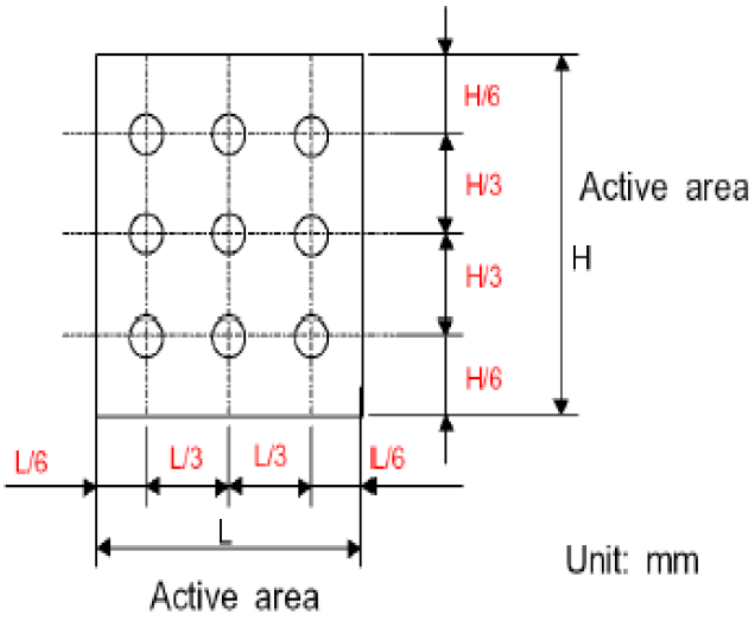

6. ABSOLUTE MAXIMUM RATINGS

PARAMETER	SYMBOL	MIN	MAX	UNIT
Supply Voltage	VCI	-0.3	4.6	V
Supply Voltage (Logic)	IOVCC	-0.3	4.6	
Operating Temperature	Top	-20	+70	℃
Storage Temperature	Tst	-30	+80	℃

7. ELECTRICAL CHARACTERISTICS

7.1 DC CHARACTERISTICS

ITEM	SYMBOL	MIN	TYP.	MAX	UNIT
System Voltage	VCI	2.4	2.8	3.3	V
Interface Operation Voltage	IOVCC	1.65	2.8	3.3	V
Logic-High Input Voltage	VIH	0.7IOVCC		IOVCC	
Logic-Low Input Voltage	VIL	GND		0.3IOVCC	

7.2 BLACKLIGHT DRIVING CONDITIONS

ITEM	SYMBOL	SPECIFICATIONS			UNIT	REMARK
		MIN	TYP.	MAX		
Supply Voltage	Vf	11.6	12.8	13.6	V	
Supply Current	IL		20		mA	
Power Consumption	P		256		W	
LED Lifetime			50,000		H_r	

8.TIMING CHARACTERISTICS

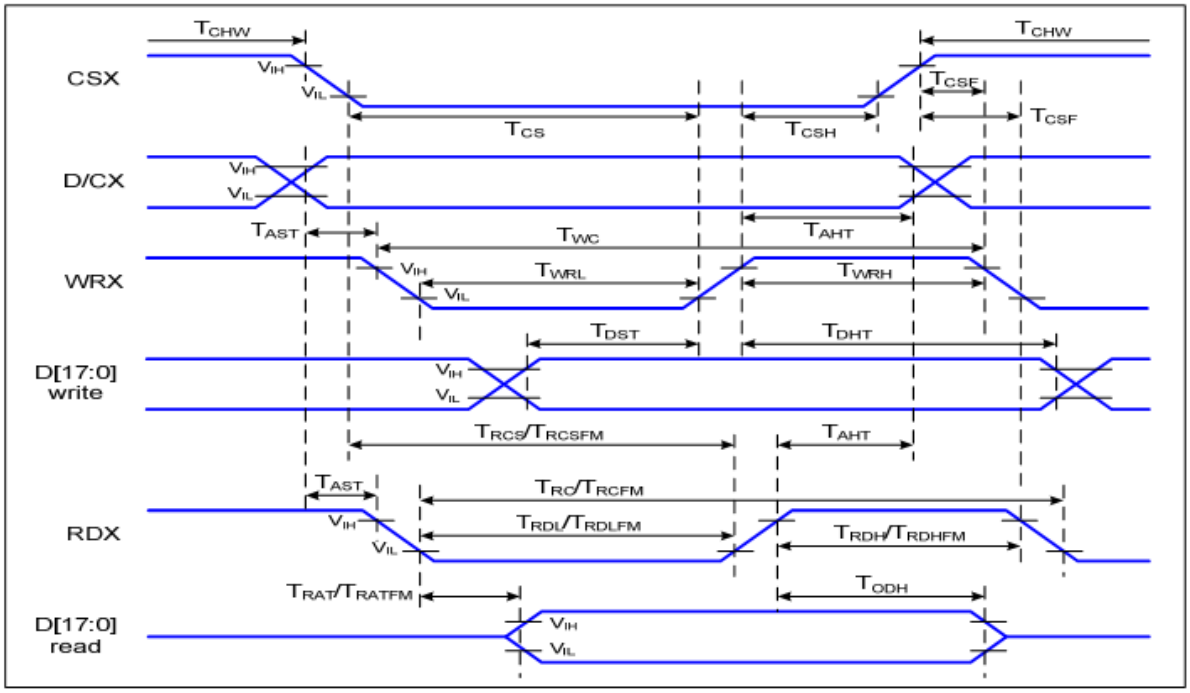

Signal	Symbol	Parameter	Min	Max	Unit	Description
D/CX	T_{AST}	Address setup time	0		ns	-
	T_{AHT}	Address hold time (Write/Read)	10		ns	
CSX	T_{CHW}	Chip select "H" pulse width	0		ns	-
	T_{CS}	Chip select setup time (Write)	15		ns	
	T_{RCS}	Chip select setup time (Read ID)	45		ns	
	T_{RCSFM}	Chip select setup time (Read FM)	355		ns	
	T_{CSF}	Chip select wait time (Write/Read)	10		ns	
	T_{CSH}	Chip select hold time	10		ns	
WRX	T_{WC}	Write cycle	66		ns	
	T_{WRH}	Control pulse "H" duration	15		ns	
	T_{WRL}	Control pulse "L" duration	15		ns	
RDX (ID)	T_{RC}	Read cycle (ID)	160		ns	When read ID data
	T_{RDH}	Control pulse "H" duration (ID)	90		ns	
	T_{RDL}	Control pulse "L" duration (ID)	45		ns	
RDX (FM)	T_{RCFM}	Read cycle (FM)	450		ns	When read from frame memory
	T_{RDHFM}	Control pulse "H" duration (FM)	90		ns	
	T_{RDLFM}	Control pulse "L" duration (FM)	355		ns	
D[17:0]	T_{DST}	Data setup time	10		ns	For CL=30pF
	T_{DHT}	Data hold time	10		ns	
	T_{RAT}	Read access time (ID)		40	ns	
	T_{RATFM}	Read access time (FM)		340	ns	
	T_{ODH}	Output disable time	20	80	ns	

9. RELIABILITY TEST

NO.	TEST ITEM	CONDITIONS
1	HIGH TEMPERATURE STORAGE	TA=80°C 96H
2	LOW TEMPERATURE STORAGE	TA=-30°C 96H
3	HIGH TEMPERATURE OPERATION	TA=70°C 96H
4	LOW TEMPERATURE OPERATION	TA=-20°C 96H
5	HIGH TEMPERATURE AND HIGH HUMIDITY OPERATION	+60°C,90%RH 96H
6	THERMAL SHOCK	-30°C →+80°C, 0.5H:5CYCLES

10. LCD MODULES HANDLING PRECAUTIONS

- The display panel is made of glass. Do not subject it to a mechanical shock by dropping it from a high place, etc.

- If the display panel is damaged and the liquid crystal substance inside it leaks out, do not get any in your mouth. If

- the substance come into contact with your skin or clothes promptly wash it off using soap and water.

- Do not apply excessive force to the display surface or the adjoining areas since this may cause the color tone to vary.

- The polarizer covering the display surface of the LCD module is soft and easily scratched. Handle this polarize carefully.

- To prevent destruction of the elements by static electricity, be careful to maintain an optimum work environment.
  -Be sure to ground the body when handling the LCD module.
  -Tools required for assembly, such as soldering irons, must be properly grounded.
  -To reduce the amount of static electricity generated, do not conduct assembly and other work under dry conditions.
  -The LCD module is coated with a film to protect the display surface. Exercise care when peeling off this protective film since static electricity may be generated.

- Storage precautions
  When storing the LCD modules, avoid exposure to direct sunlight or to the light of fluorescent lamps. Keep the modules in bags designed to prevent static electricity charging under low temperature / normal humidity conditions (avoid high temperature / high humidity and low temperatures below 0℃).Whenever possible, the LCD modules should be stored in the same conditions in which they were shipped from our company.

11. OTHERS

- Liquid crystals solidify at low temperature (below the storage temperature range) leading to defective orientation of liquid crystal or the generation of air bubbles (black or white). Air bubbles may also be generated if the module is subjected to a strong shock at a low temperature.

- If the LCD modules have been operating for a long time showing the same display patterns may remain on the screen as ghost images and a slight contrast irregularity may also appear. Abnormal operating status can be resumed to be normal condition by suspending use for some time. It should be noted that this phenomena does not adversely affect performance reliability.

- To minimize the performance degradation of the LCD modules resulting from caused by static electricity, etc. exercise care to avoid holding the following sections when handling the modules:
  - Exposed area of the printed circuit board
  - Terminal electrode sections.