GN Series



- Current ratings from 10 to 125 amps
- Output voltage 24-280 and 48-660 VAC
- Direct bond copper substrate
- LED input status indicator
- Available with IP20 “touch-safe” cover
- Transient protection built-in
- UL508 Endurance Rating (10-50A)
- UL/CSA/ TUV Approved, CE Compliant to EN60950-1

PRODUCT SELECTION

Control Voltage	10A	25A	50A	75A	100A	125A
3-32 VDC	84134000	84134010	84134020	84134030	84134040	84134080
18-36 VAC	84134002	84134012	84134022	84134032	84134042	84134082
90-280 VAC	84134001	84134011	84134021	84134031	84134041	84134081

AVAILABLE OPTIONS

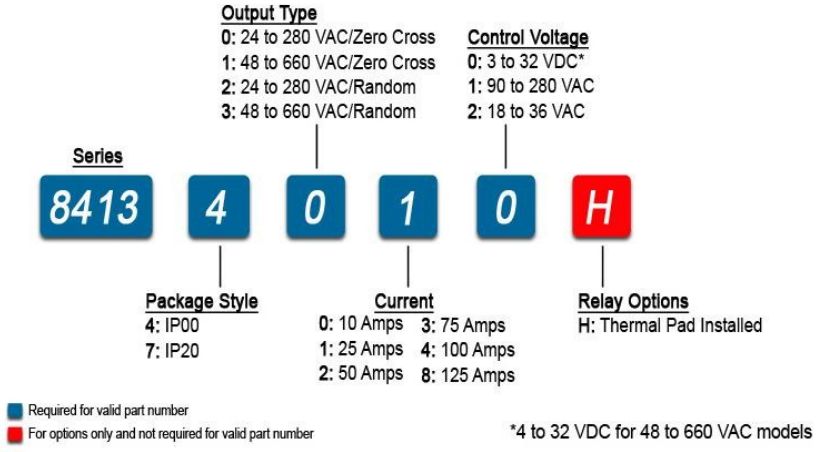

OUTPUT SPECIFICATIONS (Voltage) (1)

Description	280 VAC	660 VAC
Operating Voltage (47-440Hz) [Vrms]	24-280	48-660
Transient Overvoltage [Vpk, t = 1 min.]	600	1200
Maximum Off-State Leakage Current @ Rated Voltage [mArms]	0.1	0.25
Static off-state dv/dt (Vμs, Ta =25°C)	500	500

Crouzet Solid State Relays DataSheet Panel Mount

OUTPUT SPECIFICATIONS (Current) (1)

Description	10A	25A	50A	75A	100A	125A
Maximum Load Current (3) [Arms]	10A	25A	50A	75A	100A	125A
Minimum Load Current [mArms]	50	50	100	100	100	100
1 cycle surge current (50Hz)	150	275	710	1050	1120	1600
1 cycle surge current (60Hz)	175	300	750	1100	1200	1700
1 second surge current (Apk. Ta = 25°C) 50/60 Hz	50	85	150	225	300	375
Forward Voltage Drop (Vpk @ Imax, Ta = 25°C)	1.35	1.35	1.35	1.3	1.3	1.3
I^2T (50Hz, 1/2 cycle)	110	380	2520	5500	6270	12800
I^2T (60Hz, 1/2 cycle)	120	370	2320	5000	6000	12050
Thermal Resistance Junction to baseplate (Rjb) [°C/W]	0.5	0.4	0.25	0.155	0.155	0.15
Minimum heat sink @ Ambient (for max current = °C/W & Ta)	3.0 @ 70°C	1.5 @ 50°C	1.0 @ 40°C	0.7 @ 40°C	0.5 @ 40°C	0.4 @ 40°C

INPUT SPECIFICATIONS (1)

Description	8413xxx0	8413xxx2	8413xxx1
Input Voltage Range (2)	3-32 VDC	18-36 VAC	90-280 VAC (3)
Minimum Turn-On Voltage	3.0 VDC	18 Vrms	90 Vrms
Drop out Voltage	1.0 VDC	2 Vrms	10 Vrms
Maximum Input Current	14mA	20mArms	10mArms
Minimum input current (for on-state)	7mA	16mArms	5mArms
Input Resistance		Current Regulated	
Turn-on time (4)	8.33ms	20ms	20ms
Turn-off time	8.33ms	30ms	30ms

GENERAL SPECIFICATIONS

Description	Parameters
Ambient Operating Temperature Range (5)	-20 to 80 °C
Ambient Storage Temperature Range	-40 to 100 °C
Input to output isolation	4000 Vrms
Input/output to ground isolation	2500 Vrms
Input to output capacitance	8 pF
Housing Material	UL 94V0 (self extinguishing)
Status Indicating Display	Green LED
Weight (typical)	3.0 oz (86.5 g)
Input Terminal Screw Torque (6-32 screw) [in lbs/Nm]	8-10 / 0.9-1.1
Output Terminal Screw Torque (8-32 screw) [in lbs/Nm]	15-20 / 1.7-2.2

GENERAL NOTES

1) All parameters at 25°C unless otherwise specified.
2) 4-32Vdc for 48-660Vac models
3) For ambient temperatures above 40°C the maximum control voltage must not exceed 250Vac.
4) Random turn-on time is 100µs (for DC control only).
5) Increase minimum input voltage by 1 Vdc for operation from -20° to -40°C

MECHANICAL SPECIFICATIONS

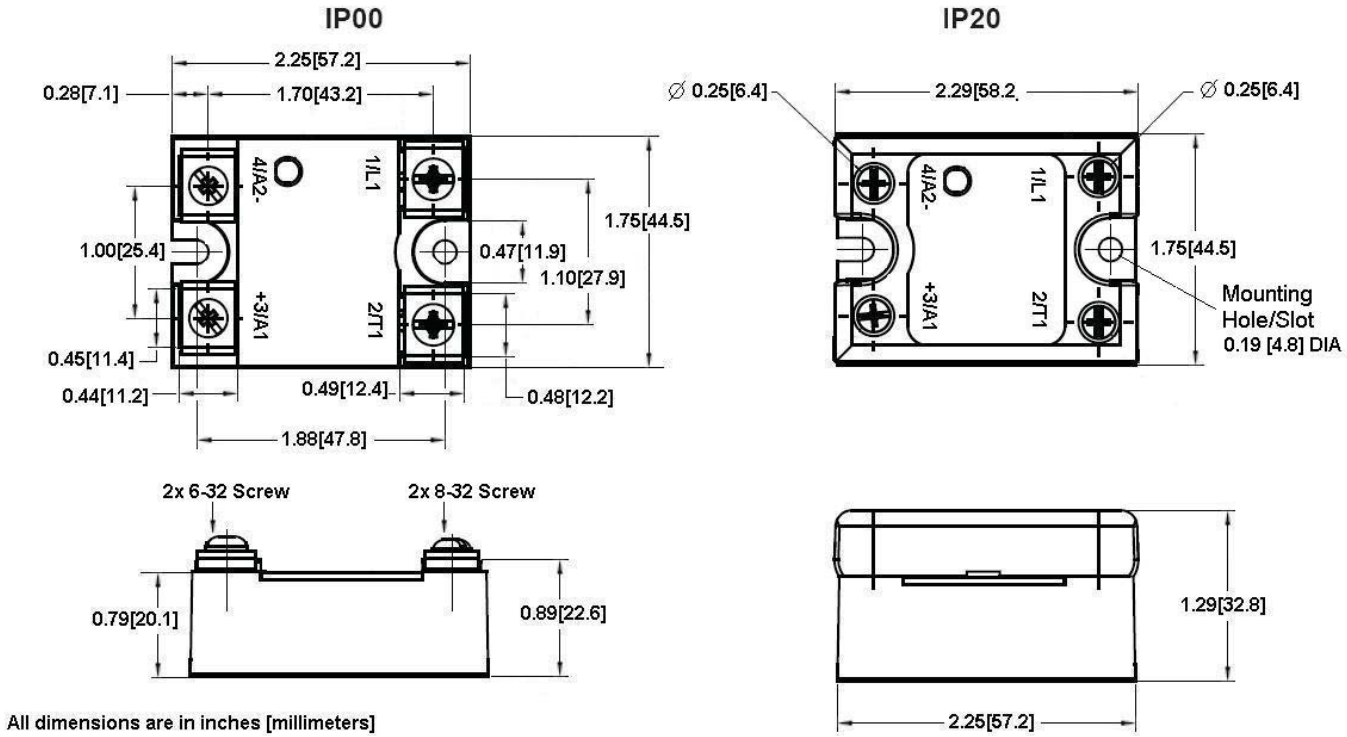

All dimensions are in inches [millimeters]

WIRING DIAGRAM

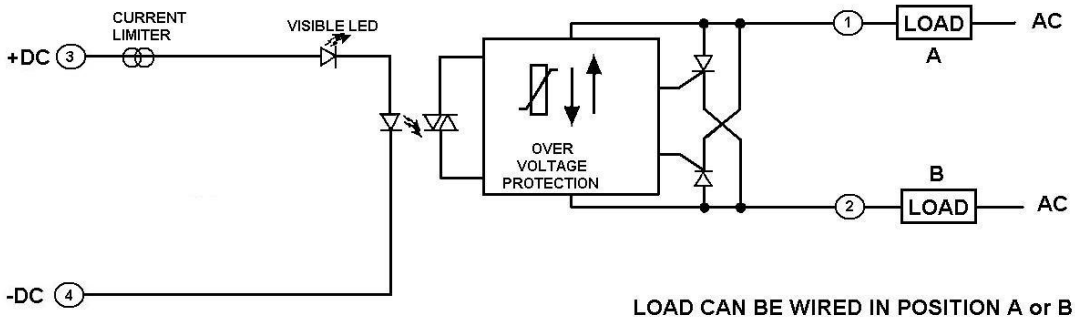

LOAD CAN BE WIRED IN POSITION A or B

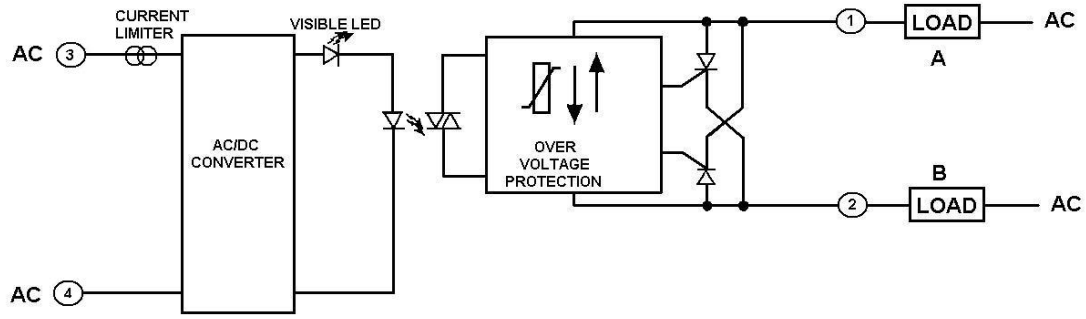

THERMAL DERATE INFORMATION

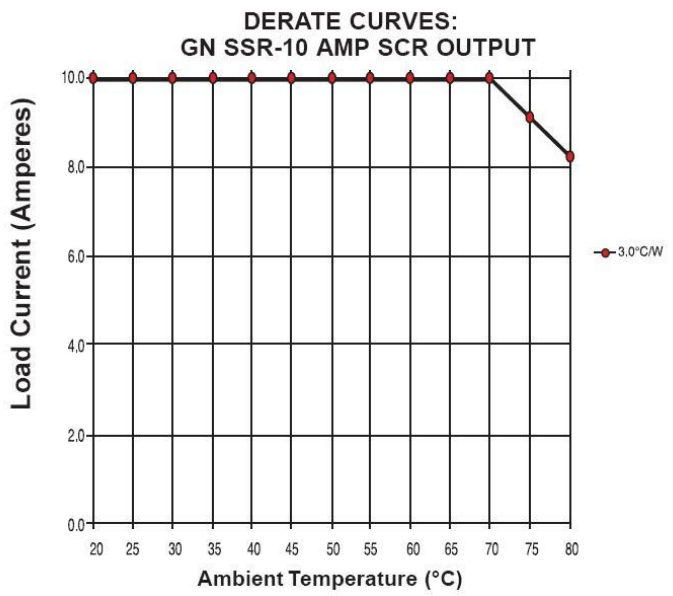

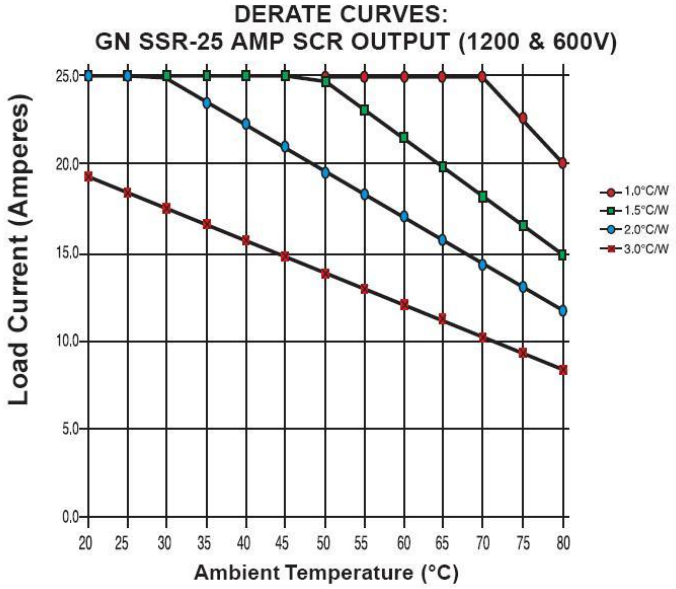

Heat sink part numbers corresponding to °C/W rating above: 3°C/W = HS301 1.5°C/W = HS151
2°C/W = HS201 1.0°C/W = HS103

THERMAL DERATE INFORMATION

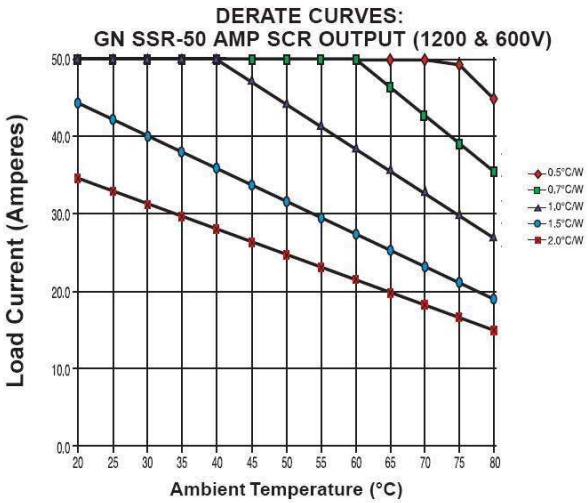

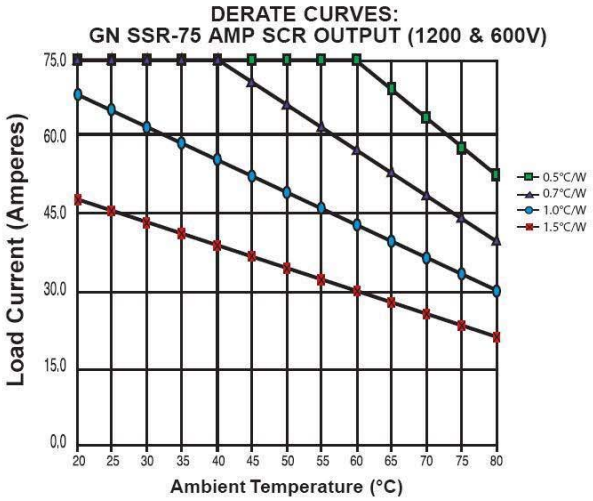

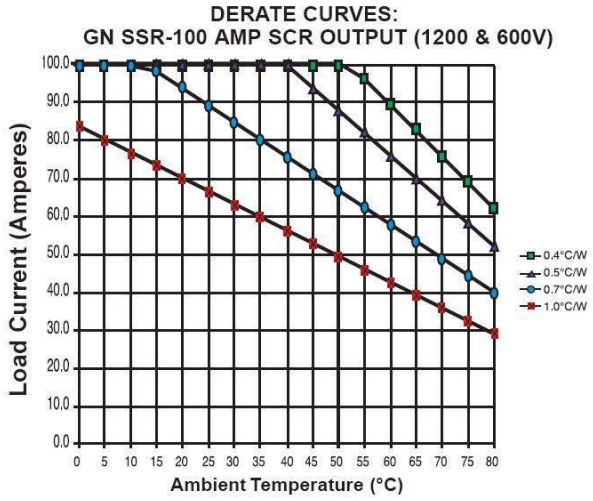

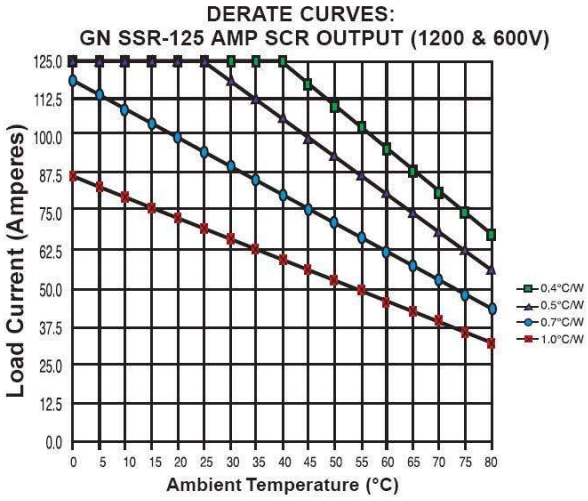

Heat sink part numbers corresponding to °C/W rating above:

2°C/W = HS201	0.7°C/W = HS072
1.5°C/W = HS151	0.5°C/W = HS053
1.0°C/W = HS103	0.4°C/W = Consult Factory

AGENCY APPROVALS

Designed in accordance with the requirements of IEC 62314
EN60950 : Meets the requirements of sections1.5: 1,7: 2.9: 2.10.5.3: 4.2: 4.5: 4.7:
IEC 1000-4-2 : Electrostatic Discharge – Level 3
IEC 1000-4-3 : Radiated Electromagnetic Noise – Level 3
IEC 1000-4-4 : Electrically Fast Transients – Level 3
IEC 1000-4-5 : Electrical Surges – Level 3
IEC 1000-4-6 : Conducted Electromagnetic Noise – Level 3
CISPIR 11 – Class A: Allowable Levels of Conducted and Radiated Noise for Industrial Environments

E79183, LR38595

⚠ DANGER / PELIGRO / DANGER /GEFAHR / PERICOLO / PERIGO

HAZARD OF ELECTRIC SHOCK, EXPLOSION, OR ARC FLASH.

- Disconnect all power before installing or working with this equipment.
- Verify all connections and replace all covers before turning on power.

Failure to follow these instructions will result in death or serious injury.

RIESGO DE DESCARGA ELECTRICA O EXPLOSION.

- Desconectar todos los suministros de energia a este equipo antes de trabajar con este equipo.
- Verificar todas las conexiones y colocar todas las tapas antes de energizer el equipo.

El incumplimiento de estas instrucciones puede provocar la muerte o lesiones serias.

RISQUE DE DESCHARGE ELECTRIQUE OU EXPLOSION

- Eteindre toutes les sources d'énergie de cet appareil avant de travailler dessus de cet appareil
- Vérifier tous connections, et remettre tous couverts en olace avant de mettre sous

De non-suivi de ces instructions provoquera la mort ou des lésions sérieuses sérieuses.

GEFAHR EINES ELEKTRISCHE N SCHLAGES ODER EINER EXPLOSION.

- Stellen Sie jeglichen Strom ab, der dieses Gerät versorgt, bevor Sie an dem Gerät Arbeiten durchführen
- Vor der Inbetriebnahme alle Anschlüsse überprüfen und alle Gehäuseteile montieren.

Unterlassung dieser Anweisungen können zum Tode oder zu schweren Verletzungen führen.

RISCHIO DI SCOSSA ELETTRICA O DELL'ESPLOSI ONE.

- Spenga tutta l'alimentazion e che fornisce questa apparecchiatu ra prima del lavorare a questa apparecchiatu ra
- Verificare tutti i collegamenti e sostituire tutte le coperture prima della rotazione sull'alimentazi one

L'omissione di seguire queste istruz ioni provocherà la morte o di lesioni serie

RISCO DE DESCARGA ELÉTTRICA OU EXPLOSÃO

- Desconectar o equipamento de toda á energia antes de instalar ou trabalhar com este equipamen to
- Verificar todas as conexões e recolocar todas as tampas antes de religar o equipamento

O não cumprimento destas instruções pode levar á morte ou lesões sérias.

⚠ WARNING / AVERTISSEMENT / WARNUNG /ADVERTENCIA / AVVERTENZA / AVISO

RISK OF MATERIAL DAMAGE AND HOT ENCLOSURE

- The product's side panels may be hot, allow time for product to cool before touching.
- Follow proper mounting instructions including torque values.
- Do not allow liquids or foreign objects to enter this product.

Failure to follow this instruction can result in serious injury, or equipment damage.

RISQUE DE DOMMAGE MATERIEL ET DE SURCHAUFFE DU BOITIER

- Les panneaux latéraux du produit peuvent être chauds. Laisser le produit refroidir avant de le toucher.
- Respecter les consignes de montage, et notamment les couples de serrage.
- Ne pas laisser pénétrer de liquide ni de corps étrangers à l'intérieur du produit.

Le non-respect de cette directive peut entraîner, des lésions corporelles graves ou des dommages matériels.

GEFAHR VON MATERIALSCHÄDEN UND GEHÄUSEERHITZUNG

- Die Seitenwände können heiß sein. Lassen Sie das Produkt abkühlen, bevor Sie es berühren.
- Beachten Sie die Montageanweisungen,
- Führen Sie keine Flüssigkeiten oder Fremdkörper in das Produkt ein.

Die Nichtbeachtung dieser Anweisung kann Körperverletzung oder Materialschäden zur Folge haben.

RIESGO DE DAÑOS MATERIALES Y DE SOBRECALENTAMIENTO DE LA UNIDAD

- Los paneles laterales del producto pueden estar calientes. Esperar que el producto se enfríe antes de tocarlo.
- Respetar las instrucciones de montaje, y en particular los pares de apretado.
- No dejar que penetren líquidos o cuerpos extraños en el producto.

Si no se respetan estas precauciones pueden producirse graves lesiones, daños materiales.

RISCHIO DI DANNI MATERIALI E D'INVOLUCRO CALDO

- I pannelli laterali dell'apparecchio possono scottare; lasciar quindi raffreddare il prodotto prima di toccarlo.
- Seguire le istruzioni di montaggio corrette.
- Non far entrare liquidi o oggetti estranei in questo apparecchio.

La mancata osservanza di questa precauzione può causare gravi rischi per l'incolumità personale o danni alle apparecchiature.

RISCO DE DANO MATERIAL E DE AQUECIMENTO

- Os painéis laterais do produto podem estar quentes; dê tempo ao produto para arrefecer antes de lhe tocar.
- Siga devidamente as instruções de montagem.
- Não permita a entrada de líquidos e de objectos estranhos no produto.

A não observância destas precauções pode provocar a morte, ferimentos graves ou danos materiais.

ANNEX - ENVIROMENTAL INFORMATION

The environmental information disclosed in this annex including the EIP Pollution logo are in compliance with People's Republic of China Electronic Industry Standard SJ/T11364 – 2006, Marking for Control of Pollution Caused by Electronic Information Products.

Part Name	Toxic or hazardous Substance and Elements					
	Lead (Pb)	Mercury (Hg)	Cadmium (Cd)	Hexavalent Chromium (Cr (VI))	Polybrominated biphenyls (PBB)	Polybrominated diphenyl ethers (PBDE)
Semiconductor die	X	O	O	O	O	O
Solder	X	O	O	O	O	O



此附件所标示的包括电子信息产品污染图标的环保信息符合中华人民共和国电子行业标准 SJ/T11364 - 2006, 电子信息产品污染控制标识要求

部件名称	有毒有害物质或元素					
	铅 (Pb)	汞 (Hg)	镉 (Cd)	六价铬 (Cr (VI))	多溴联苯 (PBB)	多溴二苯醚 (PBDE)
半导体芯片	X	O	O	O	O	O
焊接点	X	O	O	O	O	O