DATASHEET

Φ19 mm, incontinuous buzzer, 12 V/DC

Version 08/14

Item no. 1231435

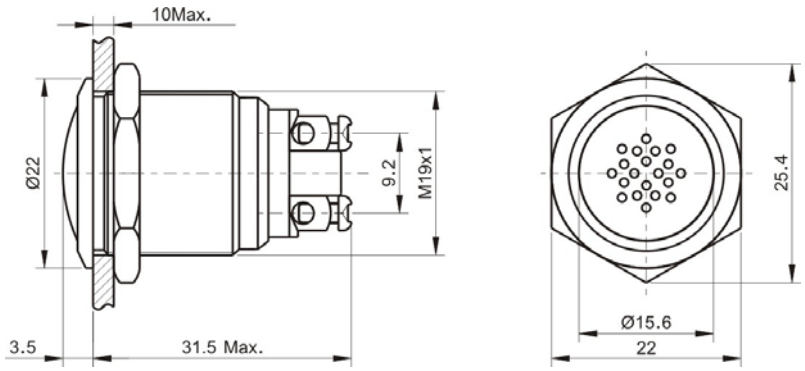



Specification	GQ19B-JM/12V
Rating voltage	12 V/DC
Max current	≤28 mA
Dielectric intensity	1000 V
Operating and storage temperature	-20 to +55 °C
Operating and storage humidity	45 to 85 % RH
Panel thickness	0.5 to 10 mm
Sound intensity	≥75 dB(1m)
Head material	stainless steel
Crust material	stainless steel
Base material	PBT

This data sheet is a publication by Conrad Electronic SE, Klaus-Conrad-Str. 1, D-92240 Hirschau (www.conrad.com). All rights including translation reserved. Reproduction by any method, e.g. photocopy, microfilming, or the capture in electronic data processing systems require the prior written approval by the editor. Reprinting, also in part, is prohibited. This data represent the technical status at the time of printing. Changes in technology and equipment reserved.

© Copyright 2013 by Conrad Electronic SE.