REV.	DESCRIPTION	DRAWN	DATE
1	INITIAL RELEASE	FROS	2025/07/29

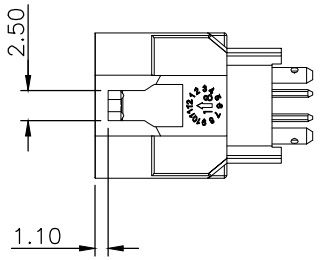

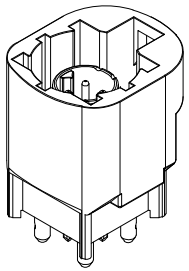

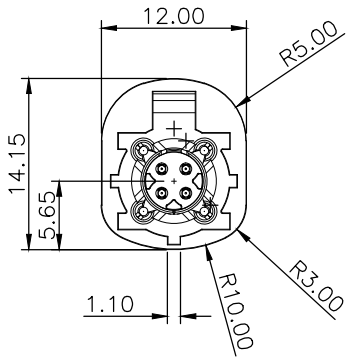

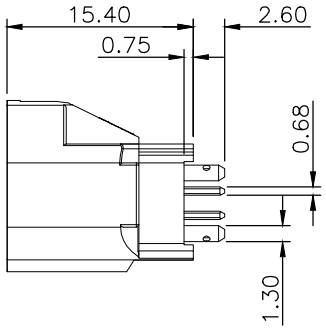

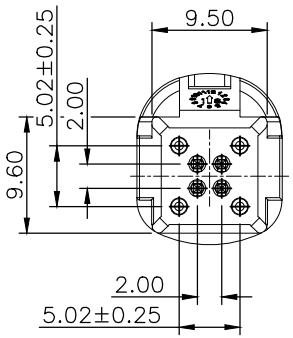

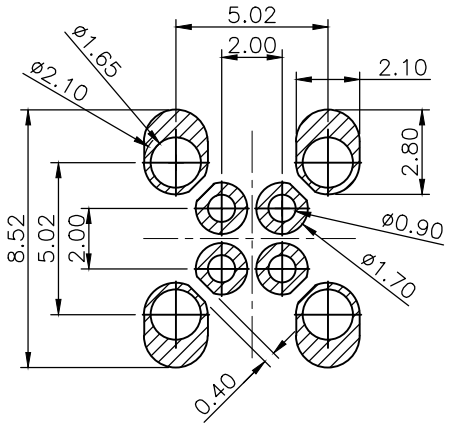

Recommended Layout (top view)
General Tolerance: ±0.05mm
Scale 4/1

SPECIFICATION:

1. ELECTRICAL
1.1 Impedance: 100Ω
1.2 Frequence: DC 2.0 GHz
1.3 Return Loss: ≥ 20dB to 1.0 GHz, ≥ 17dB to 2.0 GHz
1.4 Insertion Loss: ≤ 0.1 dB at 1.0 GHz
1.5 Insulation Resistance: 1000 Min.
1.6 Contact Resistance: 10mΩ Max.

2. MECHANICAL
2.1 Mating Cycles: ≥ 25 cycles
2.2 Engagement force: ≤ 30N
2.3 Disengagement force: ≥ 5N
2.4 Retention force latch: ≥ 110 N
2.5 Coding efficiency: ≥ 80N

3. ENVIRONMENTAL
3.1 Operating temperature range: -40°C~+105°C
3.2 Storage temperature range: -40°C~+105°C

4. SOLDER ABILITY
4.1 Recommended Wave Soldering Temperature: 260°C

How to order

231A- P S Z 00
- Z: Z Code
- S: Straight

NO.	PART NAME	DESCRIPTION
3	SHELL	Zinc alloy, tin plating over nickel plating
2	CONTACT	Brass, 6u" gold on contact area, tin plaitng on solder area, under plating nickel over all
1	HOUSING	PA, UL94V-0

UNLESS OTHERWISE SPECIFIED TOLERANCE

UNIT:	DECIMAL	LINEAR	ANGLES
mm	X.	±0.50	±5°
	X.X	±0.25	±3°
	X.XX	±0.12	±1°

ATTEND
www.attend.com.tw

DRAWN	Fros	2025/07/29
CHECKED	Tim	2025/07/29
APPROVED	Ken	2025/07/29

DRAWN NAME: HSD Plug, Straight Type

SCALE	SHEET	SIZE	PRODUCT NO.	231A-PSX00
1.6/1	1/2	A4	FILE NAME	231A-PSX00_B_1

REV.	DESCRIPTION	DRAWN	DATE

A	B	C	D
JET BLACK SIM. 9005	CREAM SIM. 9001	SIGNAL BLUE SIM. 5005	CLARET VIOLET SIM. 4004
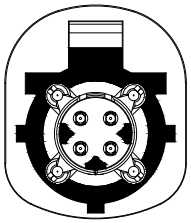	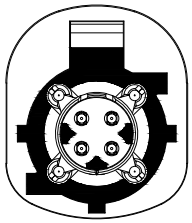	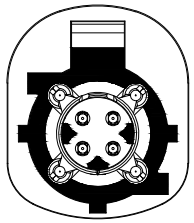	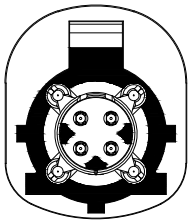
E	F	Z	
LEAF GREEN SIM. 6002	NUT BROWN SIM. 8011	WATER BLUE SIM. 5021	
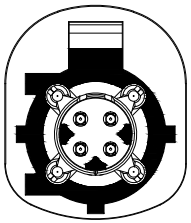	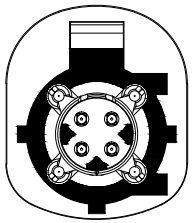	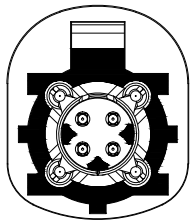	

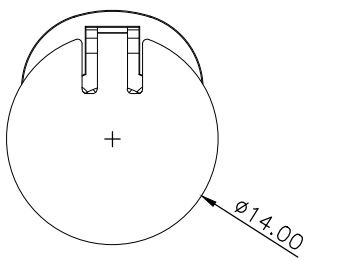

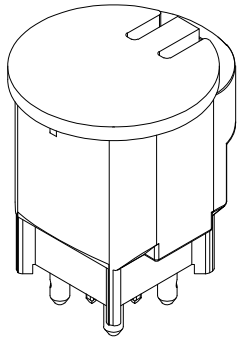

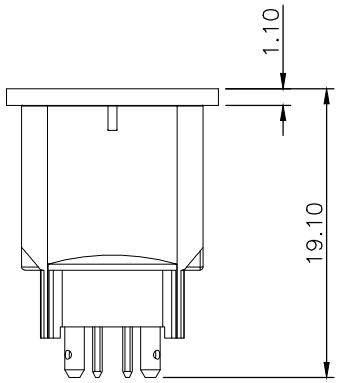

UNLESS OTHERWISE SPECIFIED TOLERANCE				ATTEND
UNIT: mm	DECIMAL	LINEAR	ANGLES	
	X.	±0.50	±5°	
	X.X	±0.25	±3°	
	X.XX	±0.12	±1°	www.attend.com.tw
DRAWN	Fros	2025/07/29		DRAWN NAME: HSD Plug, Straight Type
CHECKED	Tim	2025/07/29		
APPROVED	Ken	2025/07/29		PRODUCT NO. 231A-PSX00
	SCALE N/A	SHEET 2/2	SIZE A4	FILE NAME 231A-PSX00_B_1

REV.	DESCRIPTION	DRAWN	DATE
1	INITIAL RELEASE	FROS	2025/07/29

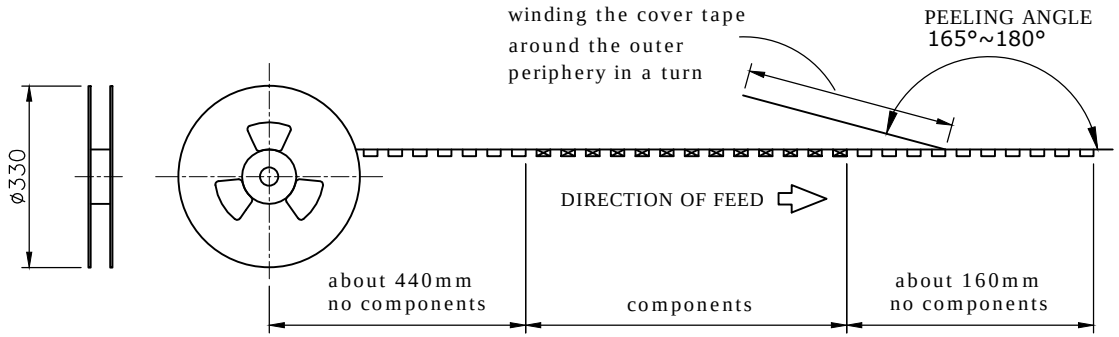

PACKAGING SPECIFICATION:

1. MATERIAL
1.1 Embossed Carrier Tape: PS Black
1.2 Top Cover Tape: PET
20-80g(Peel Speed 300mm/Minute)
1.3 Taping Reel: Plastic

2. PACKING
2.1 Quantity:
100 Piece/Reel
6 Reel/Carton
600 Piece/Carton

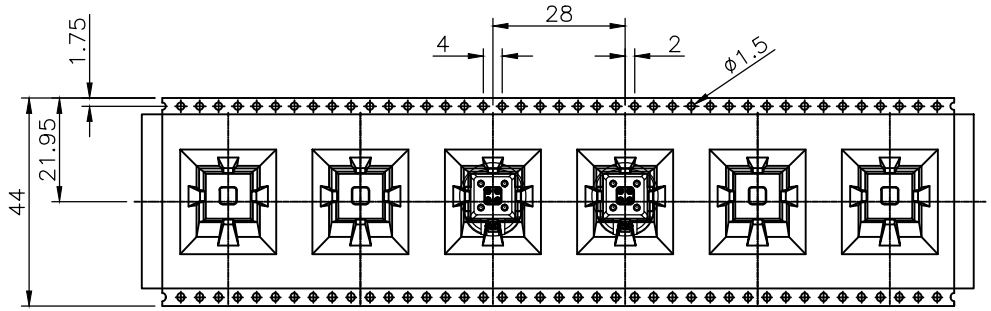

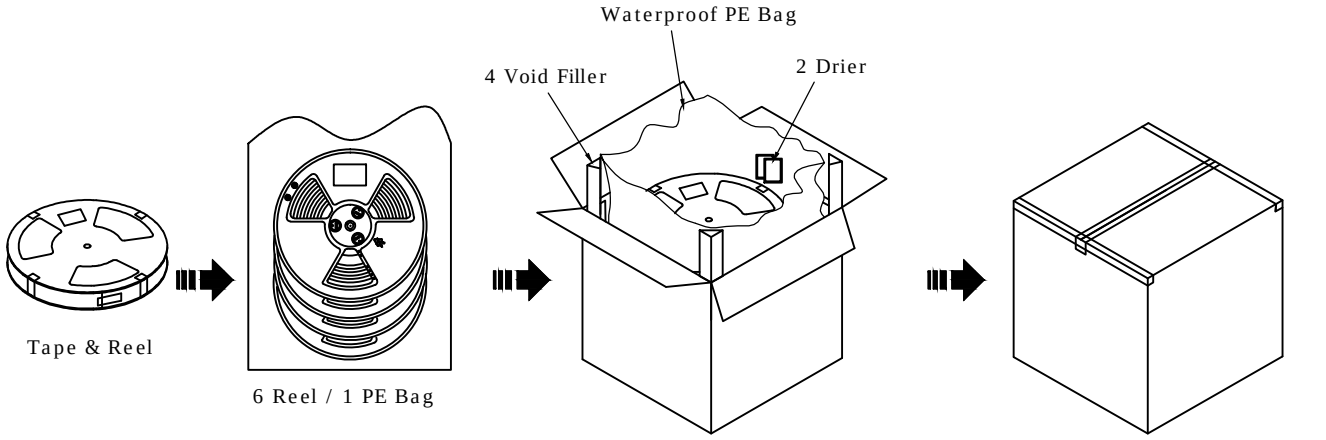

UNLESS OTHERWISE SPECIFIED TOLERANCE			
UNIT: mm	DECIMAL	LINEAR	ANGLES
	X.	±0.50	±5°
	X.X	±0.25	±3°
	X.XX	±0.12	±1°

ATTEND
www.attend.com.tw

DRAWN	Fros	2025/07/29
CHECKED	Tim	2025/07/29
APPROVED	Ken	2025/07/29

DRAWN NAME: HSD Plug, Straight Type

SCALE	SHEET	SIZE	PRODUCT NO.	231A-PSX00
0.625	1/1	A4	FILE NAME	231A-PSX00_D_1