REV.	DESCRIPTION	DRAWN	DATE
1	INITIAL RELEASE	FROS	2023/11/17

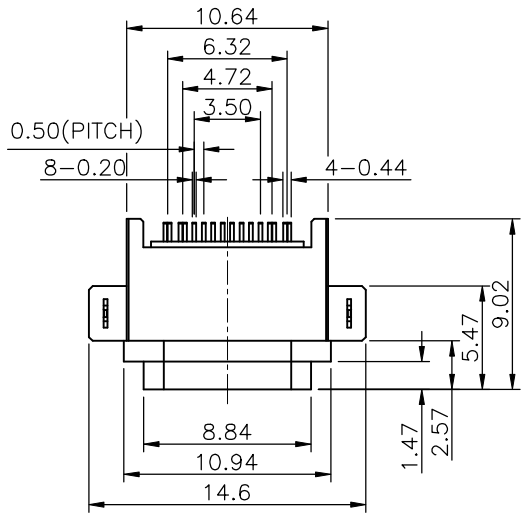

PIN ASSIGNMENTS:

PIN	SIGNAL NAME	PIN	SIGNAL NAME	SOLDER TAILS
A1	GND	B12	GND	C1
A4	VBUS	B9	VBUS	C2
		B8	SBU2	C3
A5	CC1			C4
		B7	Dn2	C5
A6	Dp1			C6
A7	Dn1			C7
		B6	Dp2	C8
A8	SBU1			C9
		B5	CC2	C10
A9	VBUS	B4	VBUS	C11
A12	GND	B1	GND	C12

SPECIFICATION:

1. ELECTRICAL
1.1 Current Rating: 5A for Vbus;
1.25A for Vconn & GND;
0.25A for other pin
1.2 Voltage Rating: 20 VAC max
1.3 Contact Resistance: 40mΩ
1.4 Insulation Resistance: 100MΩ
1.5 Dielectric Withstanding Voltage: 100VAC

2. MECHANICAL
2.1 Durability: 10,000 cycles
2.2 Insertion Force: 5 to 20N
2.3 Extraction Force: 8 to 20N

3. ENVIRONMENTAL
3.1 Operating temperature range: -40°C~+85°C
3.2 Storage temperature range: -40°C~+85°C

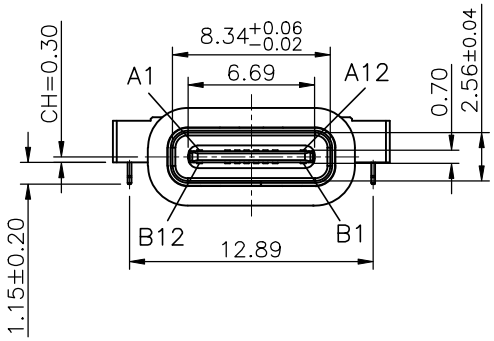

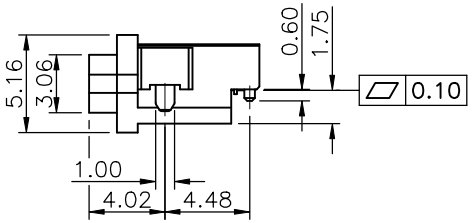

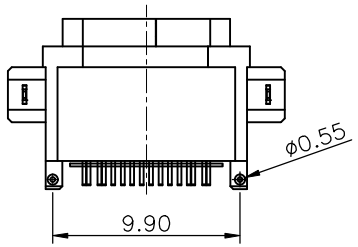

* This part is a connector only

*	ORING	P/N: 217-0008

NO.	PART NAME	DESCRIPTION
6	GLUE	EPOXY
5	OVERMOLD	PA9T, UL94V-0, Black
4	SHELL	Stainless Steel, 0.25t Nickel plating
3	MID PLATE	Stainless Steel, 0.15t
2	CONTACT	Copper Alloy, 3u" Gold plating on contact area
		Gold plating on solder tail, under plated Nickel
1	HOUSING	LCP, UL94V-0, Black

UNLESS OTHERWISE SPECIFIED TOLERANCE

UNIT:	DECIMAL	LINEAR	ANGLES
mm	X.	±0.50	±5°
	X.X	±0.25	±3°
	X.XX	±0.12	±1°

ATTEND

www.attend.com.tw

DRAWN	Fros	2023/11/17	DRAWN NAME: USB Type C Mid-Mount Receptacle 16 Pin Single Row, Water Proof IP68, 3u", Reel
CHECKED	Tim	2023/11/17	
APPROVED	Ken	2023/11/17	PRODUCT NO. 217C-CB09
	SCALE 1/1	SHEET 1/2	SIZE A4 — FILE NAME 217C-CB09_B_1

REV.	DESCRIPTION	DRAWN	DATE

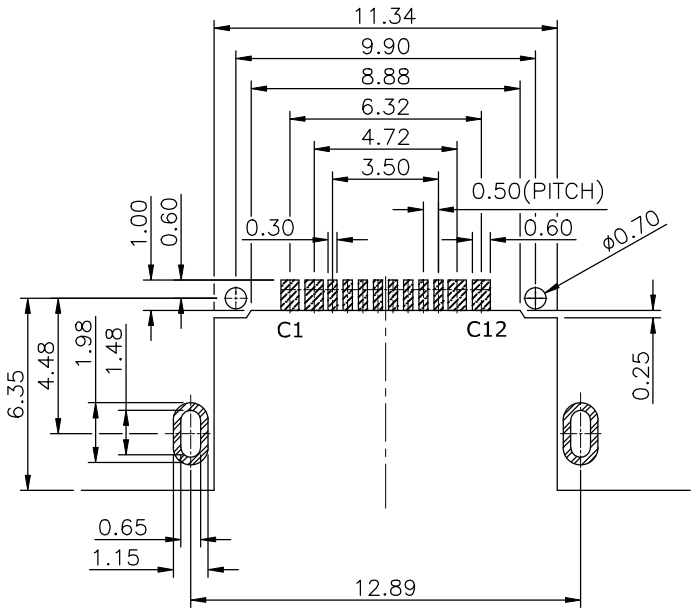

RECOMMENDED LAYOUT (TOP VIEW)
GENERAL TOLERANCE: ±0.05mm
PCB T=1.0mm

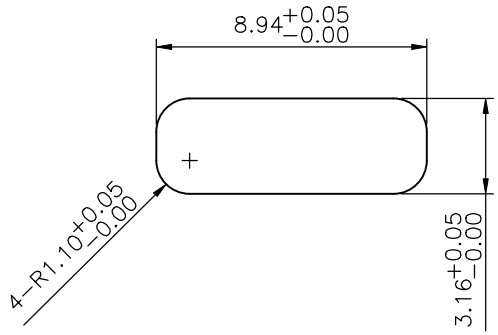

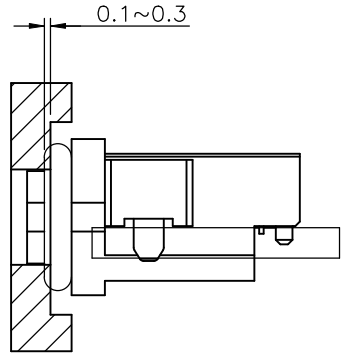

RECOMMENDED PANEL CUT

UNLESS OTHERWISE SPECIFIED TOLERANCE					
UNIT: mm	DECIMAL	LINEAR	ANGLES	ATTEND	
	X.	±0.50	±5°		
	X.X	±0.25	±3°		
	X.XX	±0.12	±1°	www.attend.com.tw	
DRAWN	Fros	2023/11/17	DRAWN NAME: USB Type C Mid-Mount Receptacle 16 Pin Single Row, Water Proof IP68, 3u", Reel		
CHECKED	Tim	2023/11/17			
APPROVED	Ken	2023/11/17	PRODUCT NO.	217C-CB09	
	SCALE 1/1	SHEET 2/2	SIZE A4	FILE NAME	217C-CB09_B_1

REV.	DESCRIPTION	DRAWN	DATE
1	INITIAL RELEASE	FROS	2023/11/17

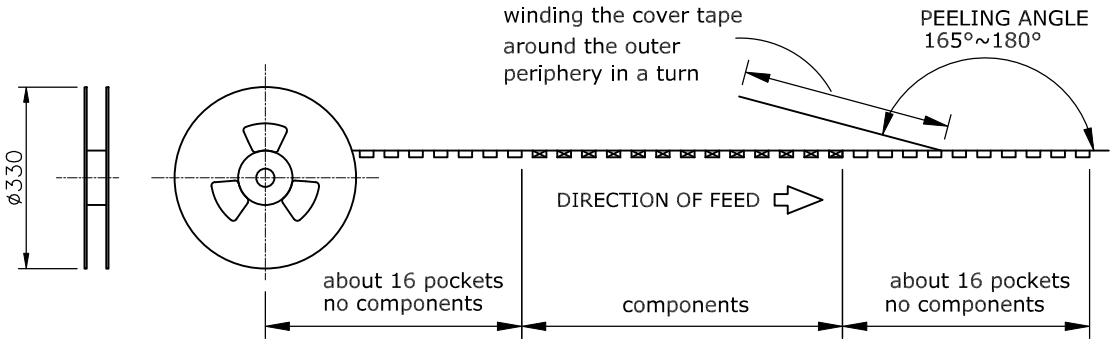

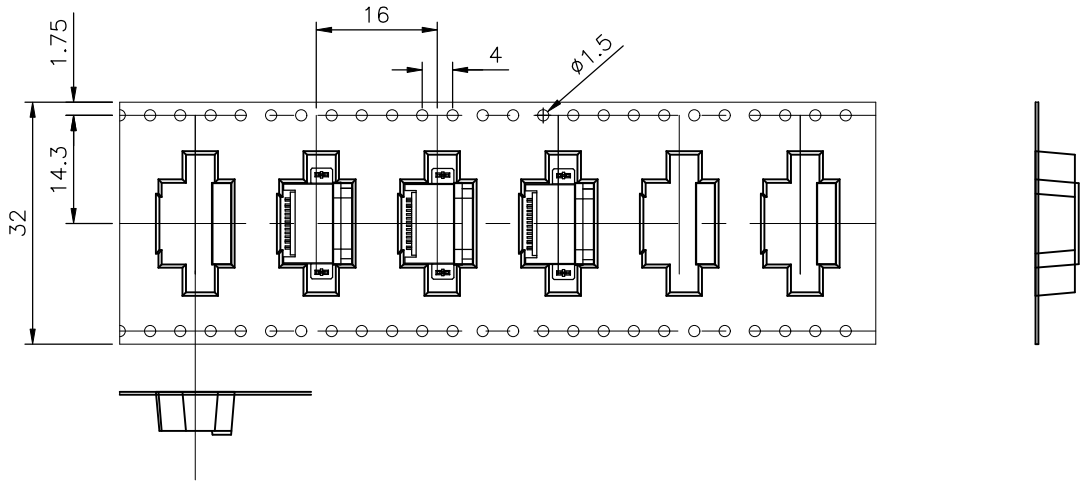

PACKAGING SPECIFICATION:

1. MATERIAL
1.1 Embossed Carrier Tape: PS Transparent
1.2 Top Cover Tape: PET
20-80g(Peel Speed 300mm/Minute)
1.3 Taping Reel: Plastic

2. PACKING
2.1 Quantity:
700 Piece/Reel
5600Piece/Outer Carton

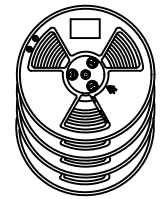

8 Tape & Reel

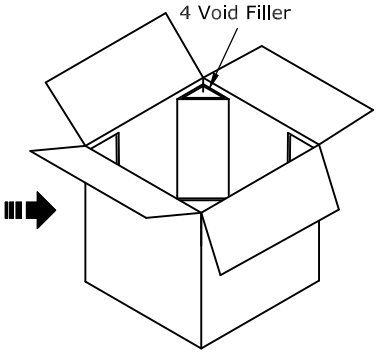

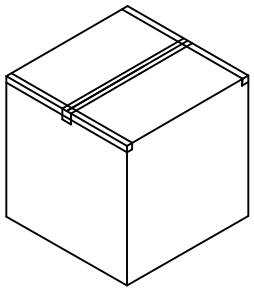

Carton L*W*H=345*345*320

UNLESS OTHERWISE SPECIFIED TOLERANCE			
UNIT: mm	DECIMAL	LINEAR	ANGLES
	X.	±0.50	±5°
	X.X	±0.25	±3°
	X.XX	±0.12	±1°

ATTEND
www.attend.com.tw

DRAWN	Fros	2023/11/17
CHECKED	Tim	2023/11/17
APPROVED	Ken	2023/11/17

DRAWN NAME:
USB Type C Mid-Mount Receptacle
16 Pin Single Row, Water Proof IP68, 3u", Reel

SCALE	SHEET	SIZE
1/1	1/1	A4

PRODUCT NO.	217C-CB09
FILE NAME	217C-CB09_D_1

REV.	DESCRIPTION	DRAWN	DATE
1	INITIAL RELEASE	FROS	2023/11/17

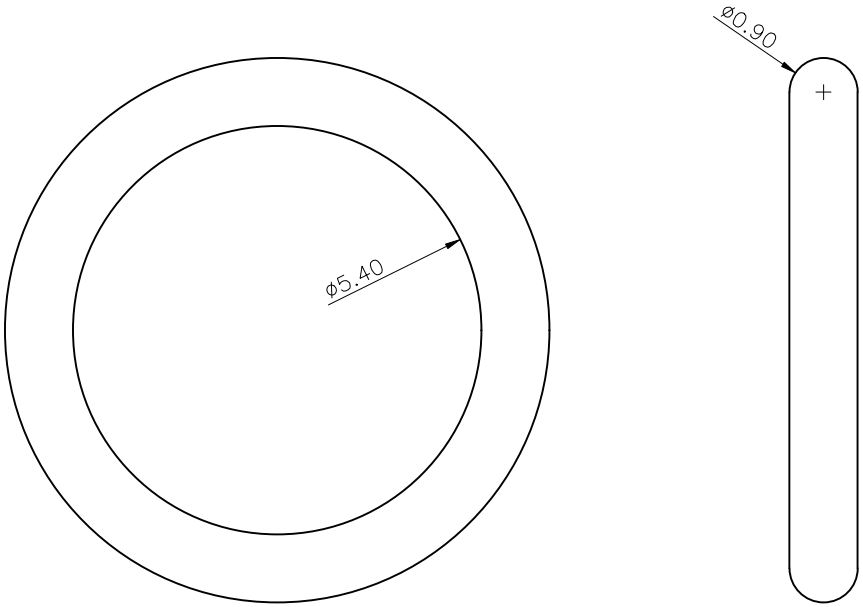

Material: silicone, gray
Package: poly bag

UNLESS OTHERWISE SPECIFIED TOLERANCE			
UNIT: mm	DECIMAL	LINEAR	ANGLES
	X.	±0.50	±5°
	X.X	±0.25	±3°
	X.XX	±0.12	±1°

ATTEND
www.attend.com.tw

DRAWN	Fros	2023/11/17
CHECKED	Tim	2023/11/17
APPROVED	Ken	2023/11/17

DRAWN NAME: O-Ring, Silicone Gray, 0.9T for 217C-CB09

SCALE 10/1	SHEET 1/1	SIZE A4	

PRODUCT NO.	217-0008
FILE NAME	217-0008_B_1