REV.	DESCRIPTION	DRAWN	DATE
1	INITIAL RELEASE	FROS	2024/09/05
2	ECR250617001	FROS	2025/06/17

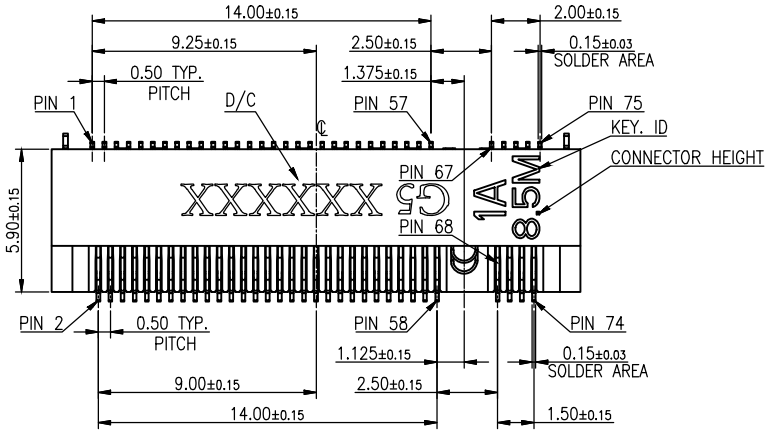

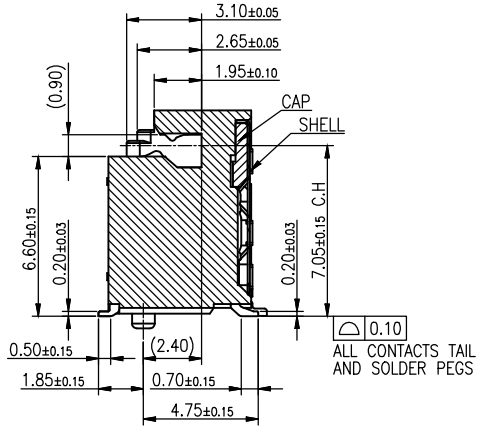

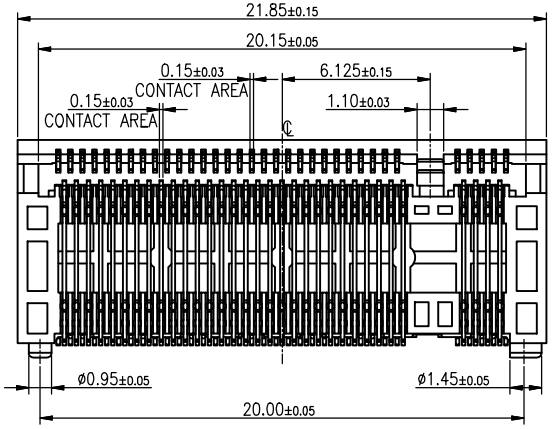

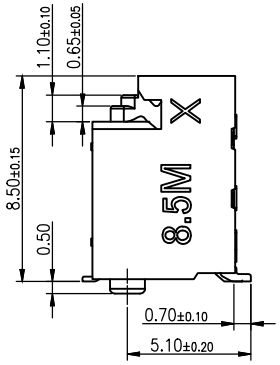

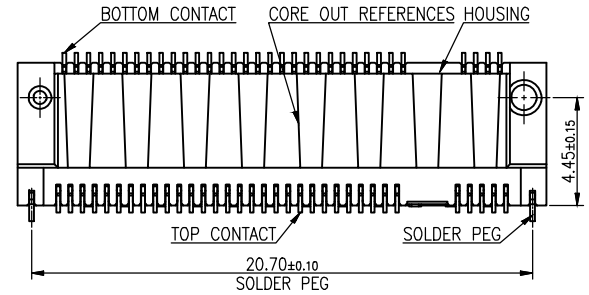

SPECIFICATION:

1. ELECTRICAL
1.1 Current Rating: 1A (power pin)
1.2 Voltage Rating: 50VAC
1.3 Contact Resistance: 55mΩ, Δ20mΩ MAX.
1.4 Insulation Resistance: 500MΩ
1.5 Dielectric Withstanding Voltage: 300VAC

2. MECHANICAL
2.1 Durability: 60 Cycle
2.2 Mating Force: 25N max.
2.3 Un-mating Force: 25N max.

3. ENVIRONMENTAL
3.1 Operating temperature range: -40°C~+85°C
3.2 Storage temperature range: -40°C~+85°C

4. SOLDER ABILITY
4.1 Recommended IR-Reflow Temperature: 260°C

NO.	PART NAME	DESCRIPTION
6	CAP	Thermoplastic, UL94V-0, black
5	SHIELD	Copper alloy, 50u" min. nickel plating over all
4	HOLD DOWN	Copper alloy, 50u" min. matte tin plating 50u" min. under-plating Nickel
3	LOWER CONTACT	Copper alloy, contact area: gold flash, solder area: gold flash, under-plating 50u" min. nickel over all
2	UPPER CONTACT	
1	INSULATOR	Thermoplastic, UL94V-0, black

UNLESS OTHERWISE SPECIFIED TOLERANCE

UNIT:	DECIMAL	LINEAR	ANGLES
mm	X.	±0.50	±5°
	X.X	±0.25	±3°
	X.XX	±0.12	±1°

ATTEND
www.attend.com.tw

DRAWN	Fros	2024/09/05
CHECKED	Tim	2024/09/05
APPROVED	Ken	2024/09/05

DRAWN NAME: M.2 Gen5 Socket, H8.5 M Key 0.5 Pitch G/F, Black, Reel

SCALE 3.2/1	SHEET 1/4	SIZE A4	
PRODUCT NO.	123A-85M02		
FILE NAME	123A-85M02_B_2		

REV.	DESCRIPTION	DRAWN	DATE

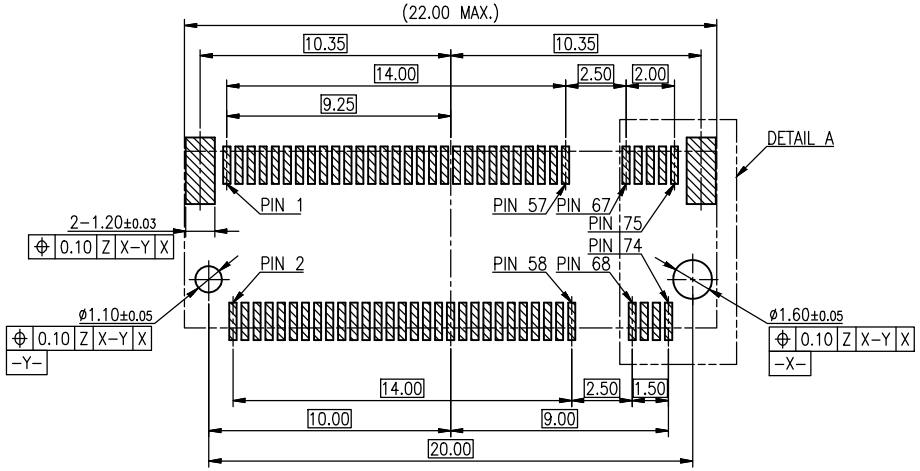

RECOMMAND PCB LAYOUT(TOP VIEW)
(DEFAULT TOLERANCE:±0.05mm)

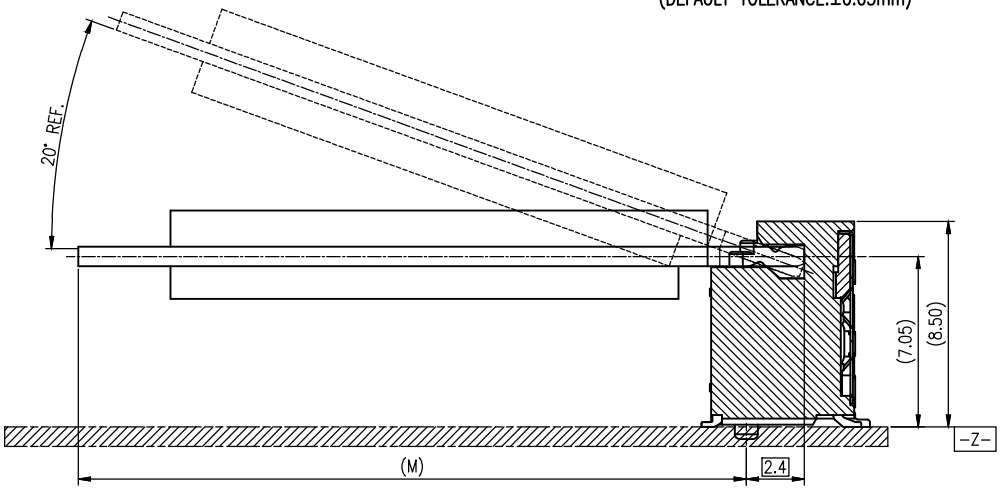

MODULE SEATING PLANT
TO ALIGNMENT POST

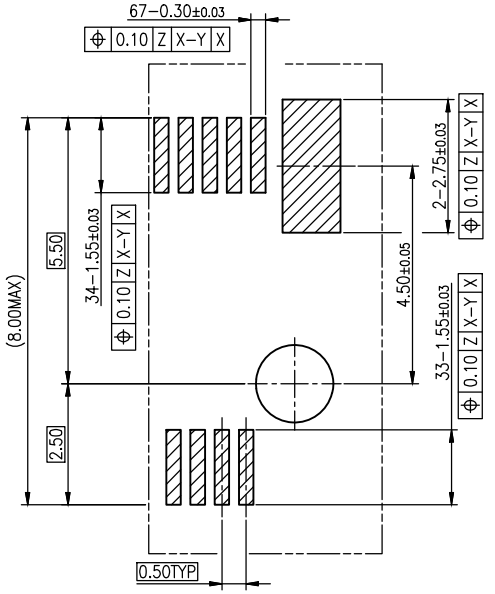

DETAIL A
SCALE 2:1

UNLESS OTHERWISE SPECIFIED TOLERANCE			
UNIT: mm	DECIMAL	LINEAR	ANGLES
	X.	±0.50	±5°
	X.X	±0.25	±3°
	X.XX	±0.12	±1°

ATTEND
www.attend.com.tw

DRAWN	Fros	2024/09/05
CHECKED	Tim	2024/09/05
APPROVED	Ken	2024/09/05

DRAWN NAME: M.2 Gen5 Socket, H8.5 M Key 0.5 Pitch G/F, Black, Reel

SCALE N/A	SHEET 2/4	SIZE A4	

PRODUCT NO.	123A-85M02
FILE NAME	123A-85M02_B_2

REV.	DESCRIPTION	DRAWN	DATE

Table: Connector Pinout Definitions(Key M)

PIN	SIGNAL	SIGNAL	PIN
		GND	75
74	3.3V	VIO_CFG(I) or GND	73
72	3.3V	GND	71
70	3.3V	PEDET=GND(SATA),PEDET=NC(PCIe)	69
68	SUSCLK(O)(0/1.8V/3.3V)	NC	67
	CONNECTOR KEY M	CONNECTOR KEY M	
58	NC	GND	57
56	NC	REFCLKp	55
54	PEWAKE#(I/O)(0/1.8V/3.3V) or NC	REFCLKn	53
52	CLKREQ#(I/O)(0/1.8V/3.3V) or NC	GND	51
50	PERST#(O)(0/1.8V/3.3V) or NC	PETp0/SATA-A+	49
48	NC	PETn0/SATA-A-	47
46	NC	GND	45
44	ALERT#(I)(0/1.8V)	PERp0/SATA-B-	43
42	SMB_DATA(I/O)(0/1.8V)	PERn0/SATA-B+	41
40	SMB_CLK(I/O)(0/1.8V)	GND	39
38	DEVSLP(O)(SATA) or GND (USB)	PETp1	37
36	USB_D- or NC	PETn1	35
34	USB_D+ or NC	GND	33
32	NC or GND (USB)	PERp1	31
30	PLA_S3#(I)(0/1.8V/3.3V) or NC	PERn1	29
28	NC	GND	27
26	NC	PETp2	25
24	NC	PETn2	23
22	VIO 1.8V or NC	GND	21
20	NC	PERp2	19
18	3.3V	PERn2	17
16	3.3V	GND	15
14	3.3V	PETp3	13
12	3.3V	PETn3	11
10	DAS/DSS(I/O)/LED_1#(I)(0/3.3V)	GND	09
08	PLN#(O)(0/1.8V/3.3V) or NC	PERp3	07
06	PWRDIS(O)(0/1.8V/3.3V) or NC	PERn3	05
04	3.3V	GND	03
02	3.3V	GND	01

SHELL GND

SHELL GND

UNLESS OTHERWISE SPECIFIED TOLERANCE			
UNIT: mm	DECIMAL	LINEAR	ANGLES
	X.	±0.50	±5°
	X.X	±0.25	±3°
	X.XX	±0.12	±1°

ATTEND

www.attend.com.tw

DRAWN	Fros	2024/09/05
CHECKED	Tim	2024/09/05
APPROVED	Ken	2024/09/05

DRAWN NAME: M.2 Gen5 Socket, H8.5 M Key 0.5 Pitch G/F, Black, Reel

SCALE N/A	SHEET 3/4	SIZE A4	

PRODUCT NO.	123A-85M02
FILE NAME	123A-85M02_B_2

REV.	DESCRIPTION	DRAWN	DATE

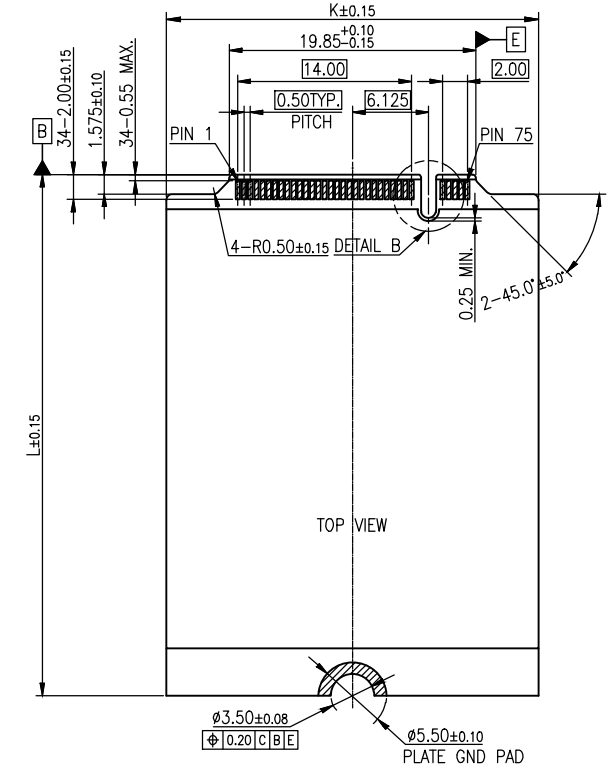

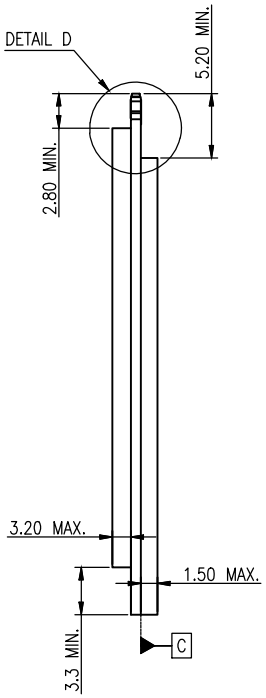

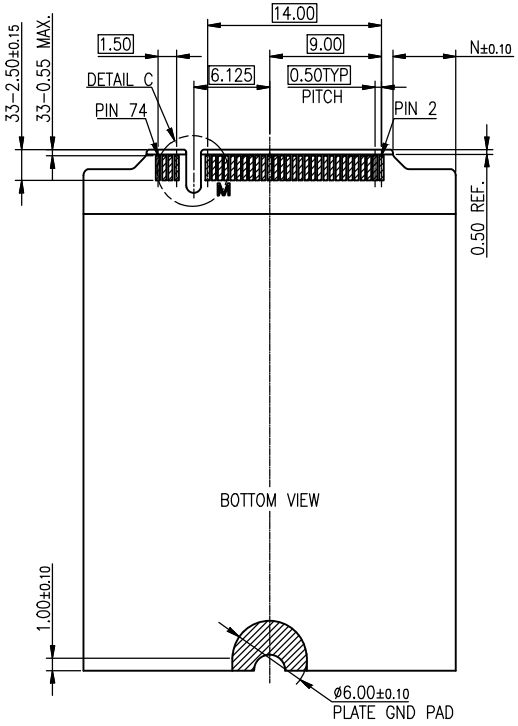

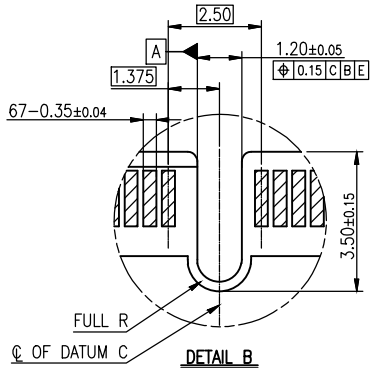

DETAIL B
SCALE 3:1

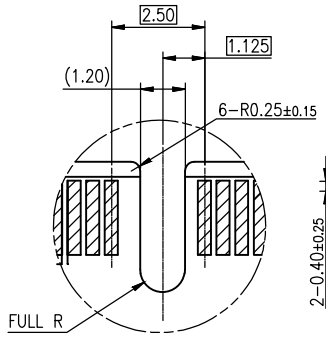

DETAIL C
SCALE 3:1

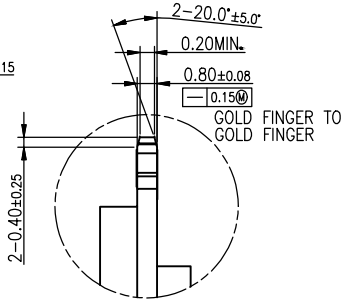

DETAIL D
SCALE 2:1

30.00	110.00	(107.60)	5.075
	80.00	(77.60)	
22.00	60.00	(57.60)	1.075
	42.00	(39.60)	
	30.00	(27.60)	
DIM. K	DIM. L	DIM. M	DIM. N

UNLESS OTHERWISE SPECIFIED TOLERANCE			
UNIT: mm	DECIMAL	LINEAR	ANGLES
	X.	±0.50	±5°
	X.X	±0.25	±3°
	X.XX	±0.12	±1°

ATTEND
www.attend.com.tw

DRAWN	Fros	2024/09/05
CHECKED	Tim	2024/09/05
APPROVED	Ken	2024/09/05

DRAWN NAME: M.2 Gen5 Socket, H8.5 M Key 0.5 Pitch G/F, Black, Reel

SCALE N/A	SHEET 4/4	SIZE A4	

PRODUCT NO.	123A-85M02
FILE NAME	123A-85M02_B_2