REV.	DESCRIPTION	DRAWN	DATE
1	INITIAL RELEASE	FROS	2024/09/05
2	ECR250617001	FROS	2025/06/17

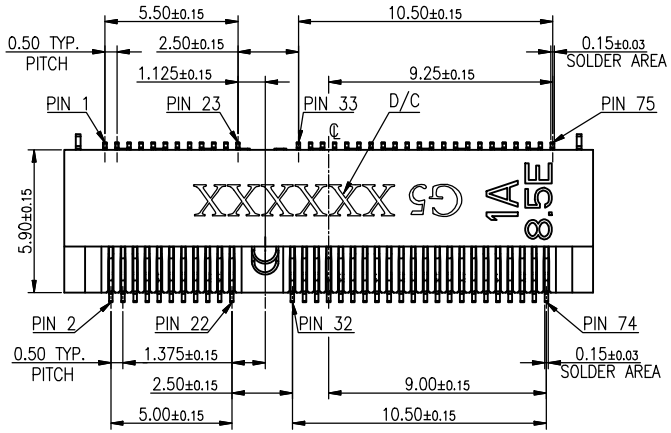

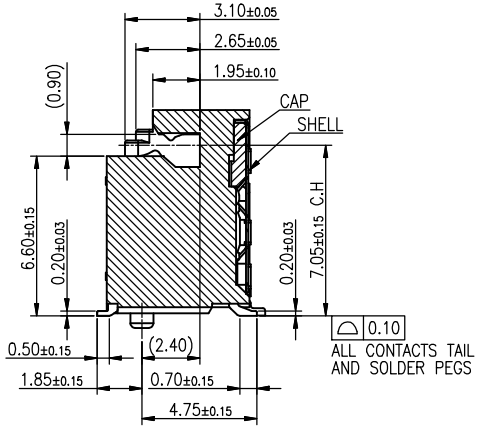

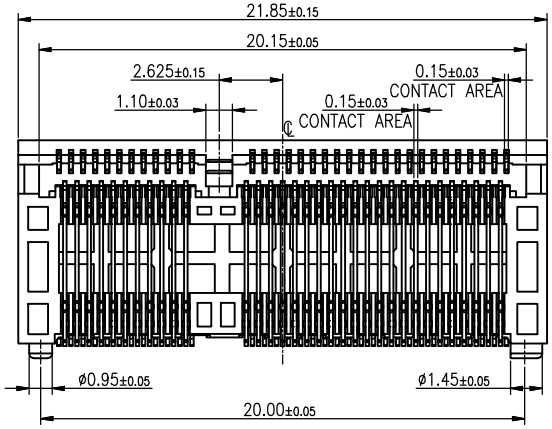

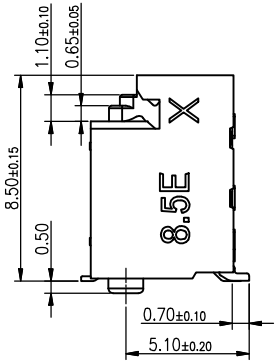

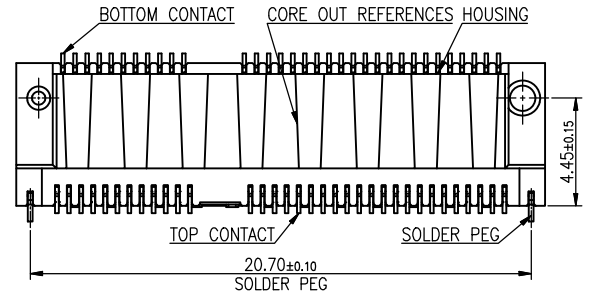

SPECIFICATION:

1. ELECTRICAL
1.1 Current Rating: 1A (power pin)
1.2 Voltage Rating: 50VAC
1.3 Contact Resistance: 55mΩ, Δ20mΩ MAX.
1.4 Insulation Resistance: 500MΩ
1.5 Dielectric Withstanding Voltage: 300VAC

2. MECHANICAL
2.1 Durability: 60 Cycle
2.2 Mating Force: 25N max.
2.3 Un-mating Force: 25N max.

3. ENVIRONMENTAL
3.1 Operating temperature range: -40°C~+85°C
3.2 Storage temperature range: -40°C~+85°C

4. SOLDER ABILITY
4.1 Recommended IR-Reflow Temperature: 260°C

NO.	PART NAME	DESCRIPTION
6	CAP	Thermoplastic, UL94V-0, black
5	SHIELD	Copper alloy, 50u" min. nickel plating over all
4	HOLD DOWN	Copper alloy, 50u" min. matte tin plating 50u" min. under-plating Nickel
3	LOWER CONTACT	Copper alloy, contact area: gold flash, solder area: gold flash, under-plating 50u" min. nickel over all
2	UPPER CONTACT	
1	INSULATOR	Thermoplastic, UL94V-0, black

UNLESS OTHERWISE SPECIFIED TOLERANCE

UNIT:	DECIMAL	LINEAR	ANGLES
mm	X.	±0.50	±5°
	X.X	±0.25	±3°
	X.XX	±0.12	±1°

ATTEND
www.attend.com.tw

DRAWN	Fros	2024/09/05
CHECKED	Tim	2024/09/05
APPROVED	Ken	2024/09/05

DRAWN NAME: M.2 Gen5 Socket, H8.5 E Key 0.5 Pitch G/F, Black, Reel

PRODUCT NO.	123A-85E02
FILE NAME	123A-85E02_B_2

SCALE	SHEET	SIZE
3.2/1	1/4	A4

REV.	DESCRIPTION	DRAWN	DATE

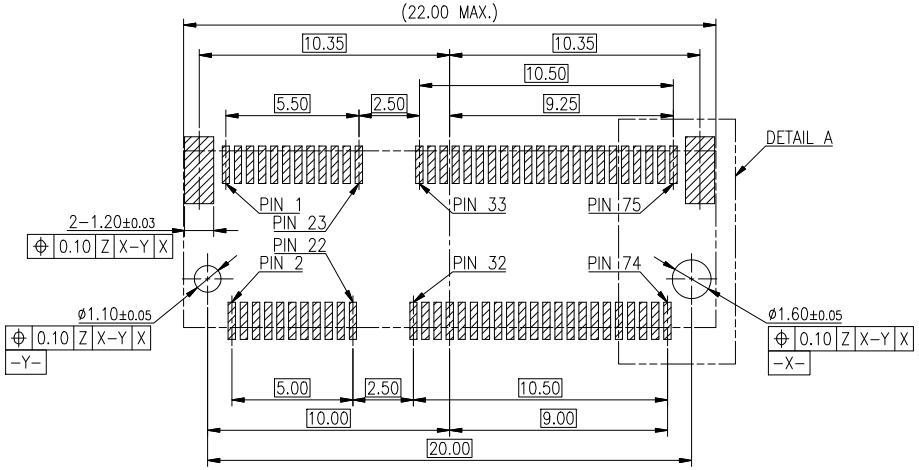

RECOMMAND PCB LAYOUT(TOP VIEW)
(DEFAULT TOLERANCE:±0.05mm)

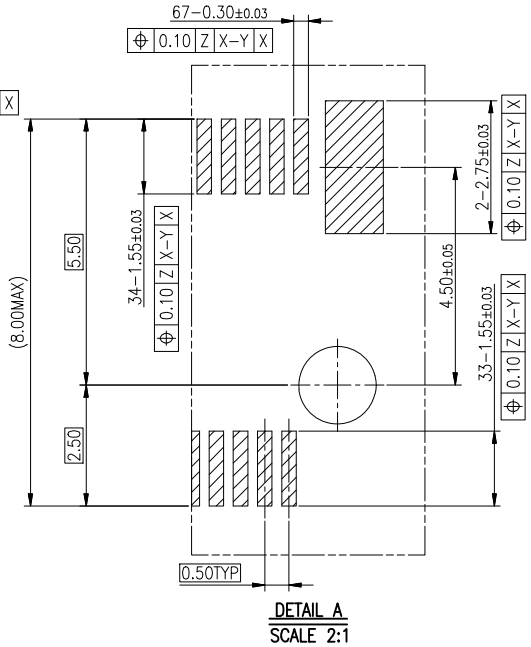

DETAIL A
SCALE 2:1

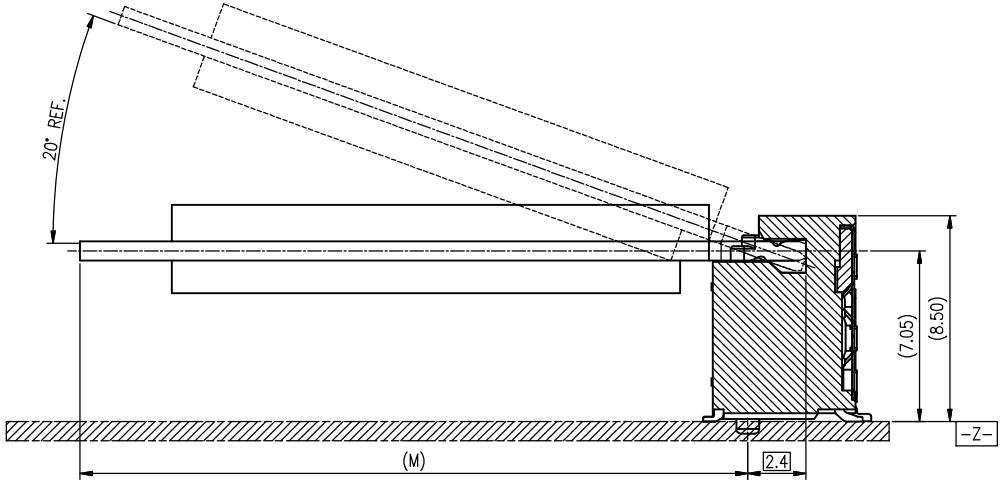

MODULE SEATING PLANT
TO ALIGNMENT POST

UNLESS OTHERWISE SPECIFIED TOLERANCE			
UNIT:	DECIMAL	LINEAR	ANGLES
mm	X.	±0.50	±5°
	X.X	±0.25	±3°
	X.XX	±0.12	±1°

ATTEND
www.attend.com.tw

DRAWN	Fros	2024/09/05	DRAWN NAME: M.2 Gen5 Socket, H8.5 E Key 0.5 Pitch G/F, Black, Reel
CHECKED	Tim	2024/09/05	
APPROVED	Ken	2024/09/05	PRODUCT NO. 123A-85E02
	SCALE N/A	SHEET 2/4	SIZE A4 — FILE NAME 123A-85E02_B_2

REV.	DESCRIPTION	DRAWN	DATE

Table: Connector Pinout Definitions(Key E)

PIN	SIGNAL	SIGNAL	PIN
74	3.3V	GND	75
72	3.3V	RESERVED/REFCLKn1	73
70	UIM_POWER_SRC/GPIO_1/PEWAKE1#	RESERVED/REFCLKp1	71
68	UIM_POWER_SNK/CLKREQ1#	GND	69
66	UIM_SWP/PERST1#	RESERVED/PERn1	67
64	VIO 1.8V	RESERVED/PERp1	65
62	ALERT#(I)(0/1.8V)	GND	63
60	I2C_CLK(O)(0/1.8V)	RESERVED/PETn1	61
58	I2C_DATA(I/O)(0/1.8V)	RESERVED/PETp1	59
56	W_DISABLE1#(O)(0/1.8V/3.3V)	GND	57
54	W_DISABLE2#(O)(0/1.8V/3.3V)	PEWAKE0#(I/O)(0/1.8V/3.3V)	55
52	PERST0#(O)(0/1.8V/3.3V)	CLKREQ0#(I/O)(0/1.8V/3.3V)	53
50	SUSCLK(O)(0/1.8V/3.3V)	GND	51
48	COEX_TXD(O)(0/1.8V)	PEFCLKn0	49
46	COEX_RXD(I)(0/1.8V)	PEFCLKp0	47
44	COEX3(I/O)(0/1.8V)	GND	45
42	VENDOR DEFINED	PERn0	43
40	VENDOR DEFINED	PERp0	41
38	VENDOR DEFINED	GND	39
36	UART_RTS(O)(0/1.8V)	PETn0	37
34	UART_CTS(I)(0/1.8V)	PETp0	35
32	UART_TXD(O)(0/1.8V)	GND	33
	CONNECTOR KEY E	CONNECTOR KEY E	
22	UART_RXD(I)(0/1.8V)	SDIO_RESET#TX_BLANKING(O)(0/1.8V)	23
20	UART_WAKE#(I)(0/3.3V)	SDIO_WAKE#(I)(0/1.8V)	21
18	VIO_CFG(I)	SDIO_DATA3#(I/O)(0/1.8V)	19
16	LED_2#(I)(OD)	SDIO_DATA2#(I/O)(0/1.8V)	17
14	PCM_OUT/I2S_SD_OUT(O)(0/1.8V)	SDIO_DATA1#(I/O)(0/1.8V)	15
12	PCM_IN/I2S_SD_IN(I)(0/1.8V)	SDIO_DATA0#(I/O)(0/1.8V)	13
10	PCM_SYNC/I2S_WS(I/O)(0/1.8V)	SDIO_CMD(I/O)(0/1.8V)	11
08	PCM_CLK/I2S_SCK(I/O)(0/1.8V)	SDIO_CLK/SYSCLK(O)(0/1.8V)	09
06	LED_1#(I)(OD)	GND	07
04	3.3V	USB_D-	05
02	3.3V	USB_D+	03
		GND	01

SHELL GND

SHELL GND

UNLESS OTHERWISE SPECIFIED TOLERANCE			
UNIT: mm	DECIMAL	LINEAR	ANGLES
	X.	±0.50	±5°
	X.X	±0.25	±3°
	X.XX	±0.12	±1°

ATTEND

www.attend.com.tw

DRAWN	Fros	2024/09/05
CHECKED	Tim	2024/09/05
APPROVED	Ken	2024/09/05

DRAWN NAME: M.2 Gen5 Socket, H8.5 E Key 0.5 Pitch G/F, Black, Reel

SCALE N/A	SHEET 3/4	SIZE A4	

PRODUCT NO.	123A-85E02
FILE NAME	123A-85E02_B_2

REV.	DESCRIPTION	DRAWN	DATE

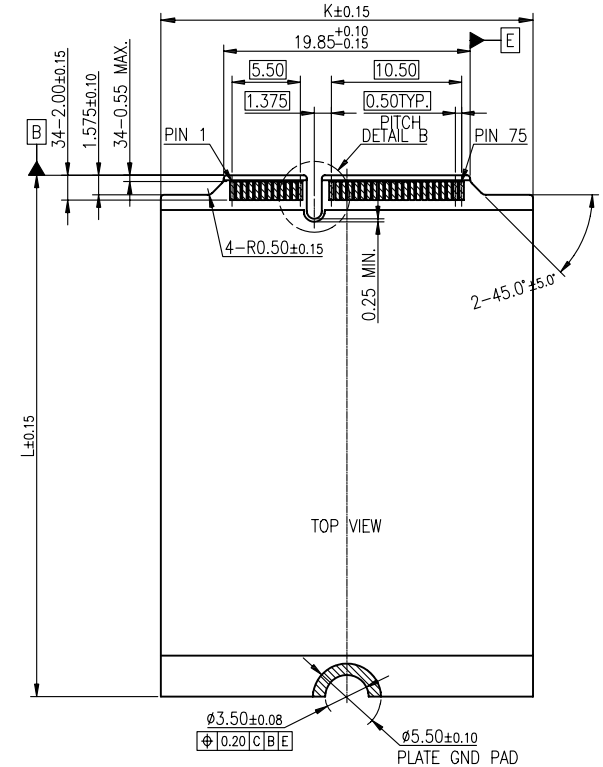

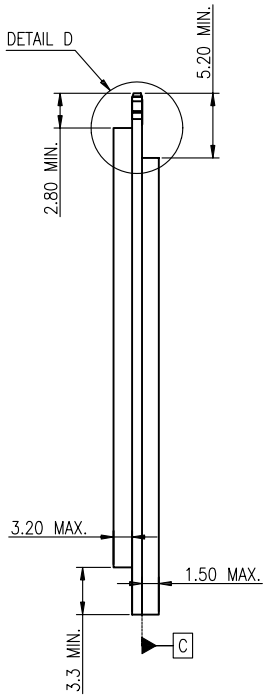

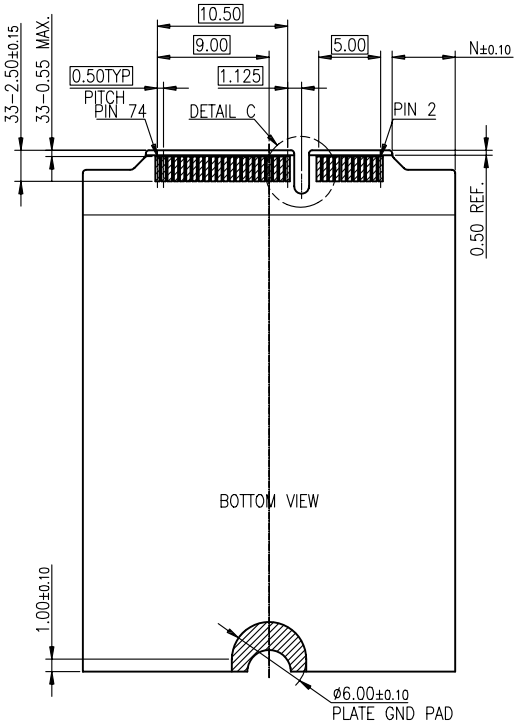

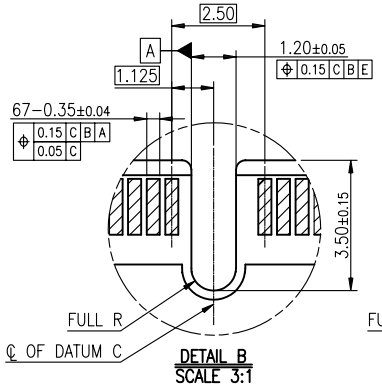

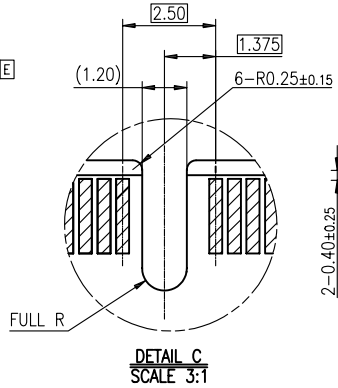

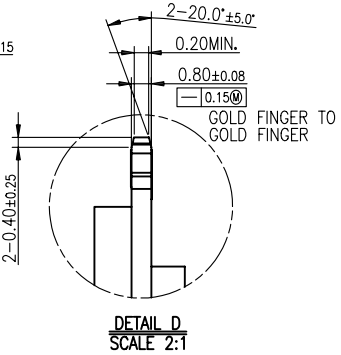

30.00	110.00	(107.60)	5.075
	80.00	(77.60)	
	60.00	(57.60)	1.075
22.00	42.00	(39.60)	
	30.00	(27.60)	
DIM. K	DIM. L	DIM. M	DIM. N

UNLESS OTHERWISE SPECIFIED TOLERANCE			
UNIT: mm	DECIMAL	LINEAR	ANGLES
	X.	±0.50	±5°
	X.X	±0.25	±3°
	X.XX	±0.12	±1°

ATTEND

www.attend.com.tw

DRAWN	Fros	2024/09/05	DRAWN NAME: M.2 Gen5 Socket, H8.5 E Key 0.5 Pitch G/F, Black, Reel
CHECKED	Tim	2024/09/05	
APPROVED	Ken	2024/09/05	PRODUCT NO. 123A-85E02
	SCALE N/A	SHEET 4/4	SIZE A4
			FILE NAME 123A-85E02_B_2