REV.	DESCRIPTION	DRAWN	DATE
1	INITIAL RELEASE	FROS	2024/09/05
2	ECR250617001	FROS	2025/06/17

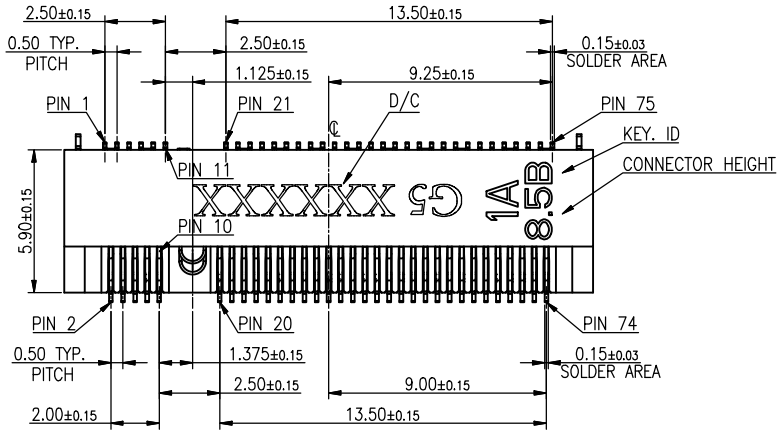

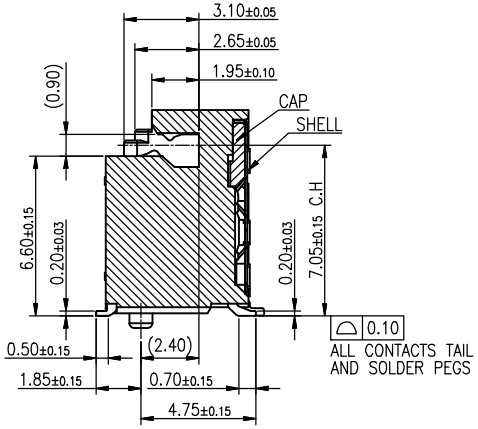

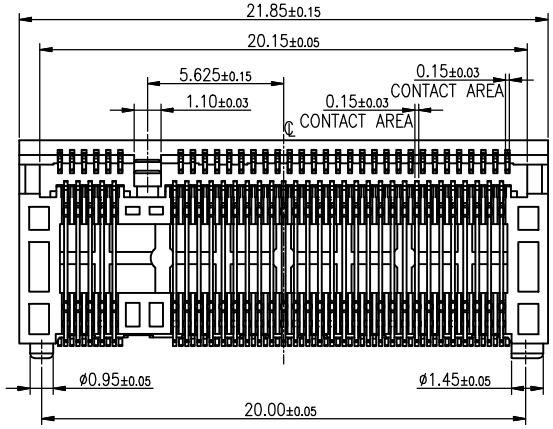

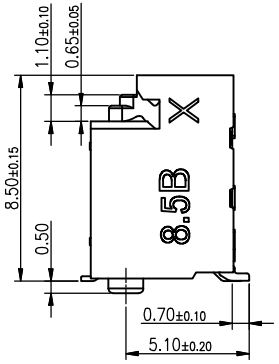

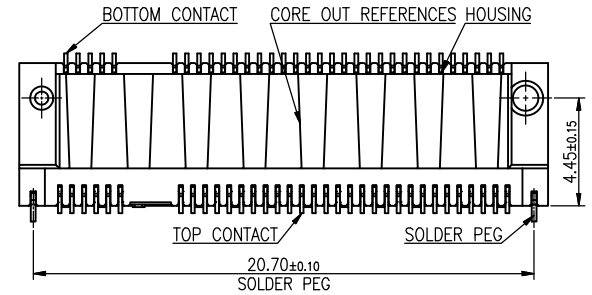

SPECIFICATION:

1. ELECTRICAL
1.1 Current Rating: 1A (power pin)
1.2 Voltage Rating: 50VAC
1.3 Contact Resistance: 55mΩ, Δ20mΩ MAX.
1.4 Insulation Resistance: 500MΩ
1.5 Dielectric Withstanding Voltage: 300VAC

2. MECHANICAL
2.1 Durability: 60 Cycle
2.2 Mating Force: 25N max.
2.3 Un-mating Force: 25N max.

3. ENVIRONMENTAL
3.1 Operating temperature range: -40°C~+85°C
3.2 Storage temperature range: -40°C~+85°C

4. SOLDER ABILITY
4.1 Recommended IR-Reflow Temperature: 260°C

NO.	PART NAME	DESCRIPTION
6	CAP	Thermoplastic, UL94V-0, black
5	SHIELD	Copper alloy, 50u" min. nickel plating over all
4	HOLD DOWN	Copper alloy, 50u" min. matte tin plating 50u" min. under-plating Nickel
3	LOWER CONTACT	Copper alloy, contact area: gold flash, solder area: gold flash, under-plating 50u" min. nickel over all
2	UPPER CONTACT	
1	INSULATOR	Thermoplastic, UL94V-0, black

UNLESS OTHERWISE SPECIFIED TOLERANCE

UNIT:	DECIMAL	LINEAR	ANGLES
mm	X.	±0.50	±5°
	X.X	±0.25	±3°
	X.XX	±0.12	±1°

ATTEND
www.attend.com.tw

DRAWN	Fros	2024/09/05
CHECKED	Tim	2024/09/05
APPROVED	Ken	2024/09/05

DRAWN NAME: M.2 Gen5 Socket, H8.5 B Key 0.5 Pitch G/F, Black, Reel

SCALE 3.2/1	SHEET 1/4	SIZE A4	PRODUCT NO. 123A-85B02
			FILE NAME 123A-85B02_B_2

REV.	DESCRIPTION	DRAWN	DATE

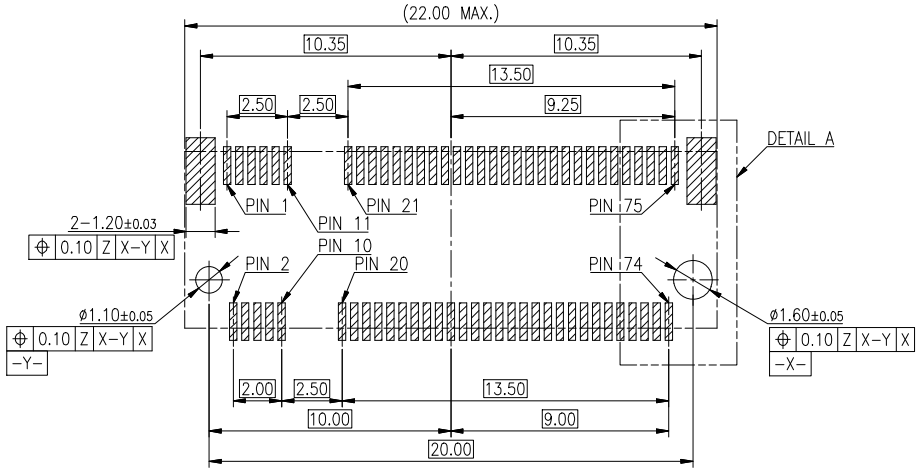

RECOMMAND PCB LAYOUT(TOP VIEW)
(DEFAULT TOLERANCE:±0.05mm)

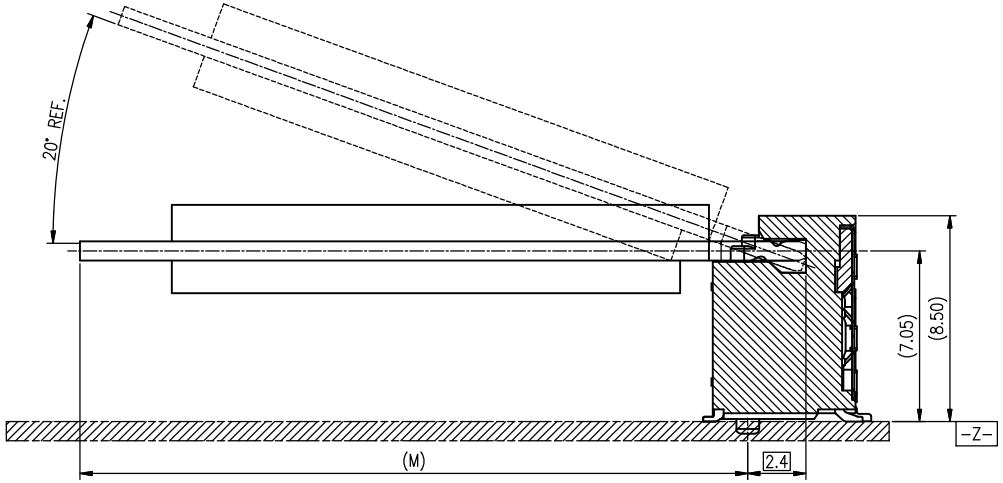

MODULE SEATING PLANT
TO ALIGNMENT POST

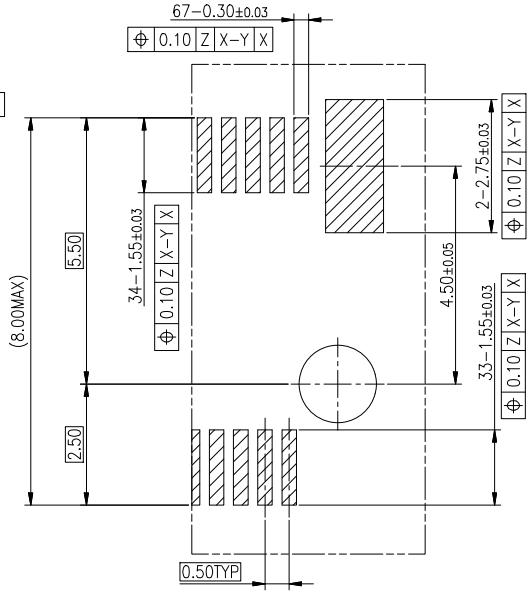

DETAIL A
SCALE 2:1

UNLESS OTHERWISE SPECIFIED TOLERANCE			
UNIT: mm	DECIMAL	LINEAR	ANGLES
	X.	±0.50	±5°
	X.X	±0.25	±3°
	X.XX	±0.12	±1°

ATTEND
www.attend.com.tw

DRAWN	Fros	2024/09/05	DRAWN NAME: M.2 Gen5 Socket, H8.5 B Key 0.5 Pitch G/F, Black, Reel
CHECKED	Tim	2024/09/05	
APPROVED	Ken	2024/09/05	PRODUCT NO. 123A-85B02
	SCALE N/A	SHEET 2/4	SIZE A4
			FILE NAME 123A-85B02_B_2

REV.	DESCRIPTION	DRAWN	DATE

Table: Connector Pinout Definitions(Key B)

PIN	SIGNAL	SIGNAL	PIN
74	3.3V/VBAT	CONFIG_2	75
72	3.3V/VBAT	VIO_CFG(I) or GND	73
70	3.3V/VBAT	GND	71
68	SUSCLK(O)(0/1.8V/3.3V)	CONFIG_1	69
66	SIM DETECT(O)	RESET#(O)(0/1.8V)	67
64	COEX_RXD(I)(0/1.8V)	ANTCTL3(I)(0/1.8V)	65
62	COEX_TXD(O)(0/1.8V)	ANTCTL2(I)(0/1.8V)	63
60	COEX3(I/O)(0/1.8V)	ANTCTL1(I)(0/1.8V)	61
58	NC	ANTCTL0(I)(0/1.8V)	59
56	NC	GND	57
54	PEWAKE#(I/O)(0/1.8V/3.3V)	REFCLKp	55
52	CLKREQ#(I/O)(0/1.8V/3.3V)	REFCLKn	53
50	PERST#(O)(0/1.8V/3.3V)	GND	51
48	GPIO_4(I/O)(0/1.8V)	PETn0/SATA-A+	49
46	GPIO_3(I/O)(0/1.8V)	PETn0/SATA-A-	47
44	GPIO_2(I/O)/ALERT#(I)/(0/1.8V)	GND	45
42	GPIO_1(I/O)/SMB_DATA(I/O)/(0/1.8V)	PERn0/SATA-B-	43
40	GPIO_0(I/O)/SMB_CLK(I/O)/(0/1.8V)	PERn0/SATA-B+	41
38	DEVSLP(O)	GND	39
36	UIM_PWR(I)	PETp1/USB3.1-Tx+/SSIC-TxP	37
34	UIM_DATA(I/O)	PETn1/USB3.1-Tx-/SSIC-TxN	35
32	UIM_CLK(I)	GND	33
30	UIM_RESET(I)	PERp1/USB3.1-Rx+/SSIC-RxP	31
28	PLA_S2#(I)/GPIO_8(I/O) (0/1.8V)	PERn1/USB3.1-Rx-/SSIC-RxN	29
26	GPIO_10(I/O) (0/1.8V)	GND	27
24	GPIO_7(I/O) (0/1.8V)	DPR(O)(0/1.8V)	25
22	GPIO_6(I/O)(0/1.8V)	GPIO_11(I/O)(0/1.8V)	23
20	GPIO_5(I/O)(0/1.8V)	CONFIG_0	21
	CONNECTOR KEY B	CONNECTOR KEY B	
10	GPIO_9/DAS/DSS(I/O)/LED_1#(I)(0/3.3V)	GND	11
08	W_DISABLE1#(O)(0/1.8V/3.3V)	USB_D-	09
06	FULL_CARD_POWER_OFF#(O)(0/1.8V or 3.3V)	USB_D+	07
04	3.3V	GND	05
02	3.3V	GND	03
		CONFIG_3	01

SHELL GND

SHELL GND

UNLESS OTHERWISE SPECIFIED TOLERANCE			
UNIT: mm	DECIMAL	LINEAR	ANGLES
	X.	±0.50	±5°
	X.X	±0.25	±3°
	X.XX	±0.12	±1°

ATTEND

www.attend.com.tw

DRAWN	Fros	2024/09/05
CHECKED	Tim	2024/09/05
APPROVED	Ken	2024/09/05

DRAWN NAME: M.2 Gen5 Socket, H8.5 B Key 0.5 Pitch G/F, Black, Reel

SCALE N/A	SHEET 3/4	SIZE A4	

PRODUCT NO.	123A-85B02
FILE NAME	123A-85B02_B_2

REV.	DESCRIPTION	DRAWN	DATE

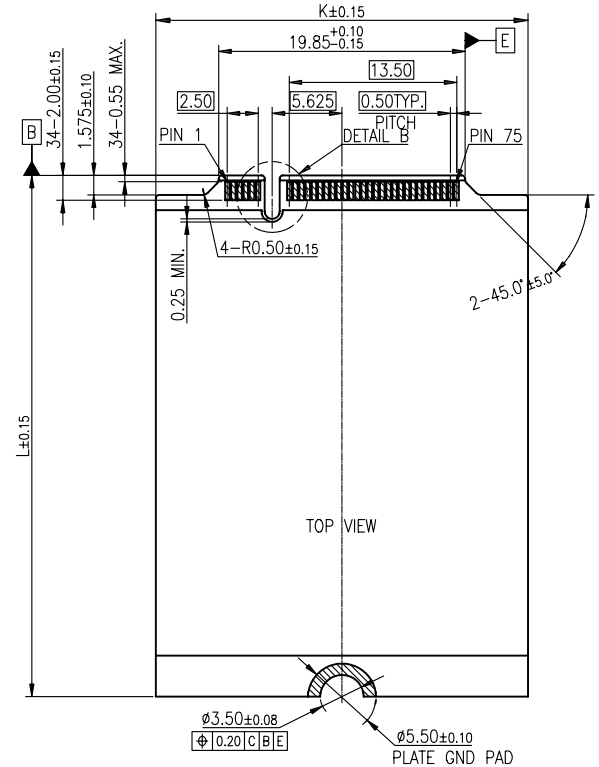

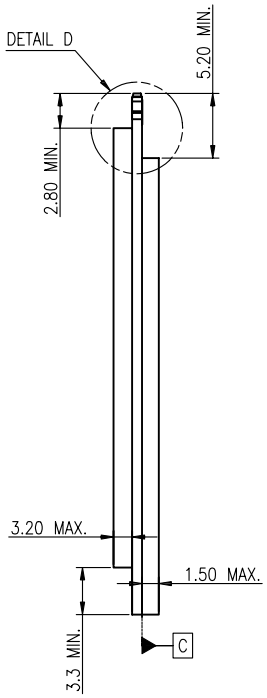

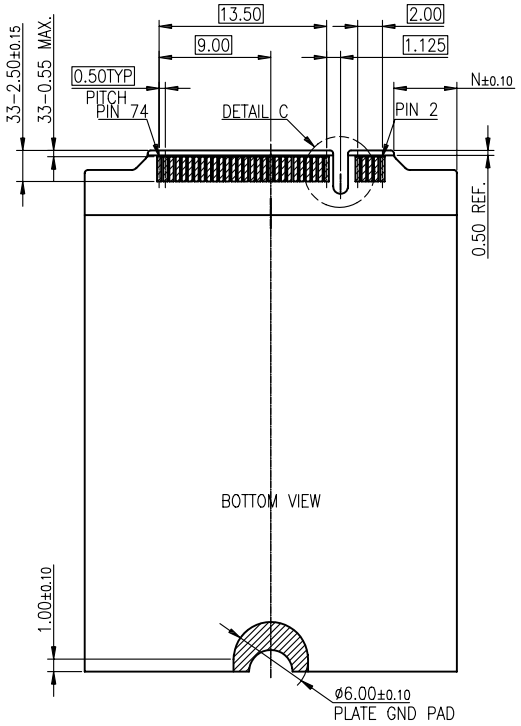

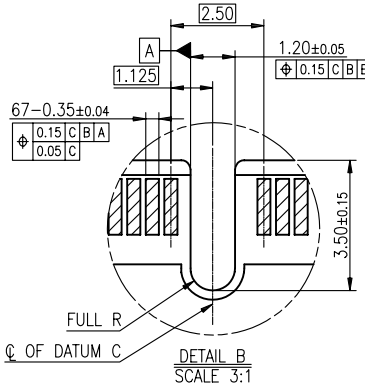

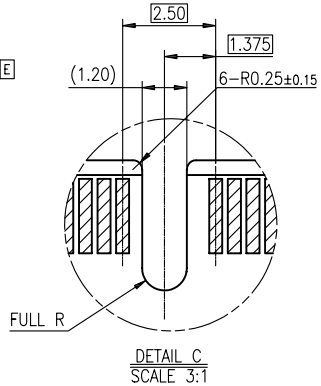

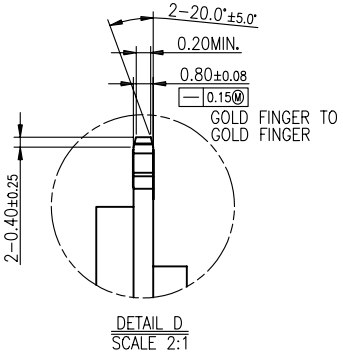

30.00	110.00	(107.60)	5.075
	80.00	(77.60)	
	60.00	(57.60)	1.075
22.00	42.00	(39.60)	
	30.00	(27.60)	
DIM. K	DIM. L	DIM. M	DIM. N

UNLESS OTHERWISE SPECIFIED TOLERANCE			
UNIT: mm	DECIMAL	LINEAR	ANGLES
	X.	±0.50	±5°
	X.X	±0.25	±3°
	X.XX	±0.12	±1°

ATTEND

www.attend.com.tw

DRAWN	Fros	2024/09/05	DRAWN NAME: M.2 Gen5 Socket, H8.5 B Key 0.5 Pitch G/F, Black, Reel
CHECKED	Tim	2024/09/05	
APPROVED	Ken	2024/09/05	PRODUCT NO. 123A-85B02
	SCALE N/A	SHEET 4/4	SIZE A4
			FILE NAME 123A-85B02_B_2