| REV. | DESCRIPTION | DRAWN | DATE |
|---|---|---|---|
| 1 | INITIAL RELEASE | TIM | 2021/06/08 |

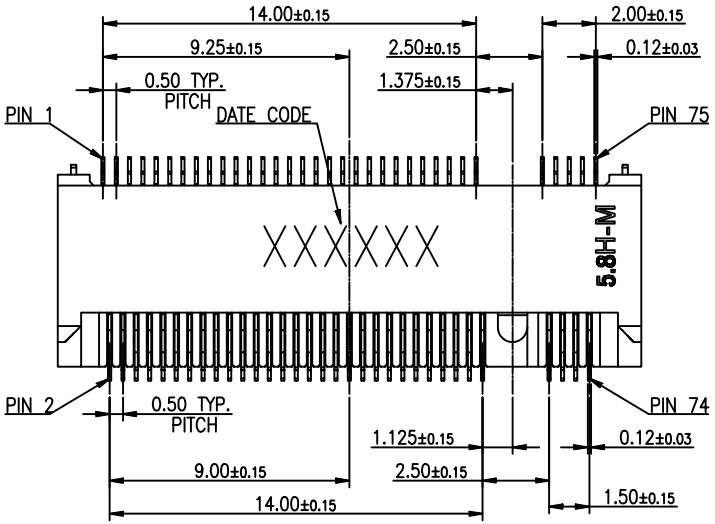


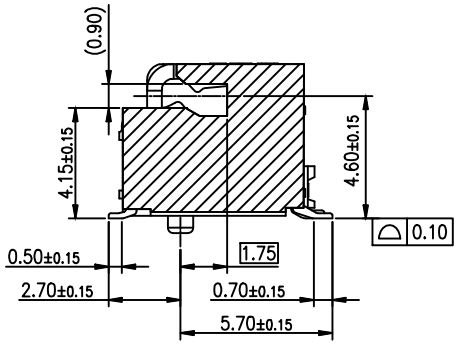


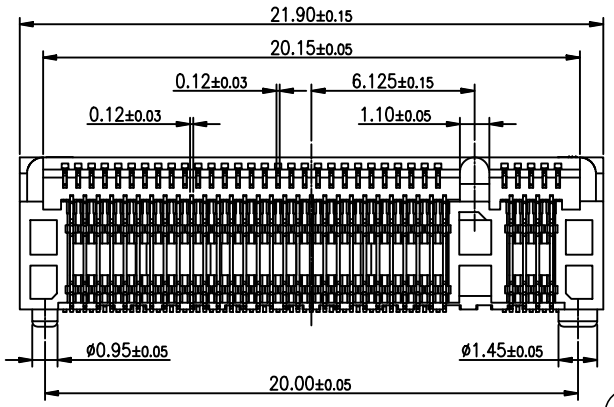


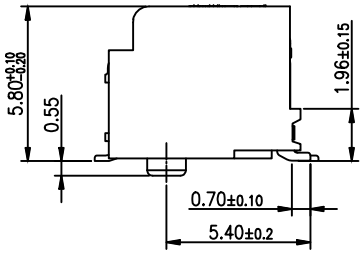


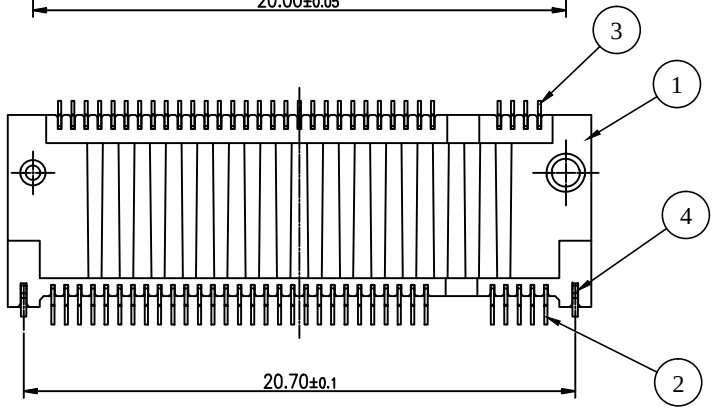


SPECIFICATION:

1. ELECTRICAL
1.1 Current Rating: 0.5A per pin
1.2 Voltage Rating: 50VAC
1.3 Contact Resistance: 55mΩ, Δ20mΩ MAX.
1.4 Insulation Resistance: 500MΩ
1.5 Dielectric Withstanding Voltage: 300VAC

2. MECHANICAL
2.1 Durability: 60 Cycle
2.2 Mating Force: 20N max.
2.3 Un-mating Force: 20N max.

3. ENVIRONMENTAL
3.1 Operating temperature range: -40°C~+85°C
3.2 Storage temperature range: -40°C~+85°C

4. SOLDER ABILITY
4.1 Recommended IR-Reflow Temperature: 260°C

| NO. | PART NAME | DESCRIPTION |
|---|---|---|
| 4 | HOLD DOWN | Copper alloy, 50u" min. Matte Tin plated, under-plated Nickel 50u" min. |
| 3 | LOWER CONTACT | Copper alloy, Contact area: Gold flash, Solder area: Gold flash, all under-plated Nickel 50u" min. |
| 2 | UPPER CONTACT | |
| 1 | INSULATOR | Thermoplastic, UL94V-0, Black |

UNLESS OTHERWISE SPECIFIED TOLERANCE

| UNIT: | DECIMAL | LINEAR | ANGLES |
|---|---|---|---|
| mm | X. | ±0.50 | ±5° |
| | X.X | ±0.25 | ±3° |
| | X.XX | ±0.12 | ±1° |

ATTEND
www.attend.com.tw

| | | |
|---|---|---|
| DRAWN | Tim | 2021/06/08 |
| CHECKED | Fros | 2021/06/08 |
| APPROVED | Ken | 2021/06/08 |

DRAWN NAME: M.2 Socket, H5.8 M Key 0.5 Pitch G/F, Black, Reel

| | | | |
|---|---|---|---|
| SCALE N/A | SHEET 1/3 | SIZE A4 | PRODUCT NO. 123A-58M01 |
| | | | FILE NAME 123A-58M01_B_1 |

| REV. | DESCRIPTION | DRAWN | DATE |
|---|---|---|---|
| | see sheet one | | |

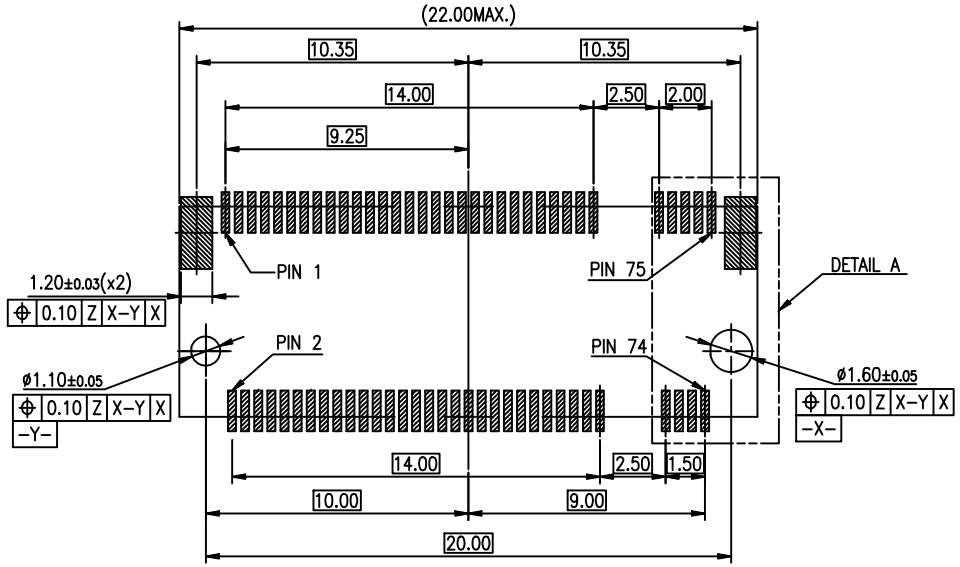


RECOMMAND PCB LAYOUT(TOP VIEW)
(DEFAULT TOLERANCE:±0.05mm)

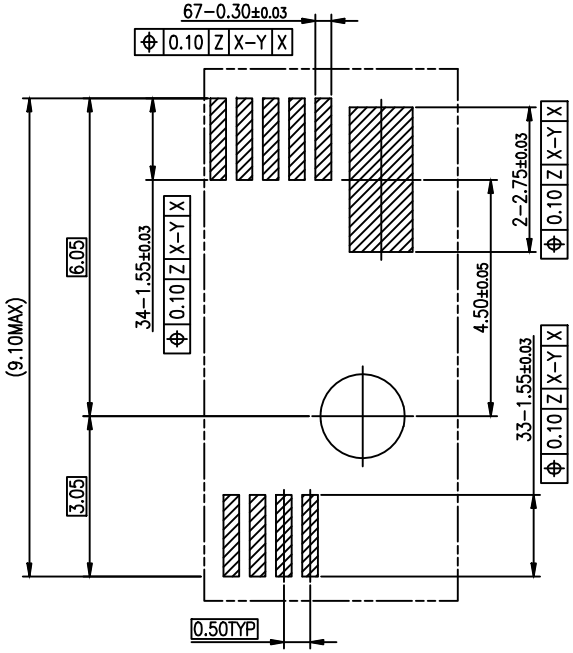


DETAIL A
SCALE 2:1

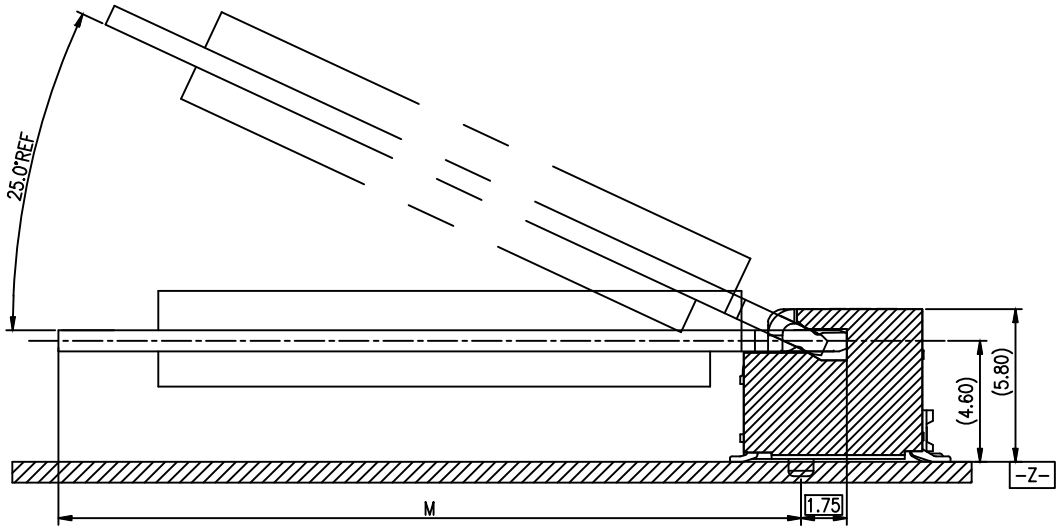


| |
|---|
| 108.25 |
| 78.25 |
| 58.25 |
| 40.25 |
| 28.25 |
| DIM. M |

| UNLESS OTHERWISE SPECIFIED TOLERANCE | | | | |
|---|---|---|---|---|
| UNIT: | DECIMAL | LINEAR | ANGLES | ATTEND |
| m m | X. | ±0.50 | ±5° | |
| | X.X | ±0.25 | ±3° | |
| | X.XX | ±0.12 | ±1° | www.attend.com.tw |

| | | | |
|---|---|---|---|
| DRAWN | Tim | 2021/06/08 | DRAWN NAME: M.2 Socket, H5.8 M Key 0.5 Pitch G/F, Black, Reel |
| CHECKED | Fros | 2021/06/08 | |
| APPROVED | Ken | 2021/06/08 | PRODUCT NO. 123A-58M01 |
| | SCALE N/A | SHEET 2/3 | SIZE A4 |
| | | | FILE NAME 123A-58M01_B_1 |

| REV. | DESCRIPTION | DRAWN | DATE |
|---|---|---|---|
| | see sheet one | | |

| DIM. K | DIM. L |
|---|---|
| 30.00 | 110.00 |
| | 80.00 |
| | 60.00 |
| 22.00 | 42.00 |
| | 30.00 |

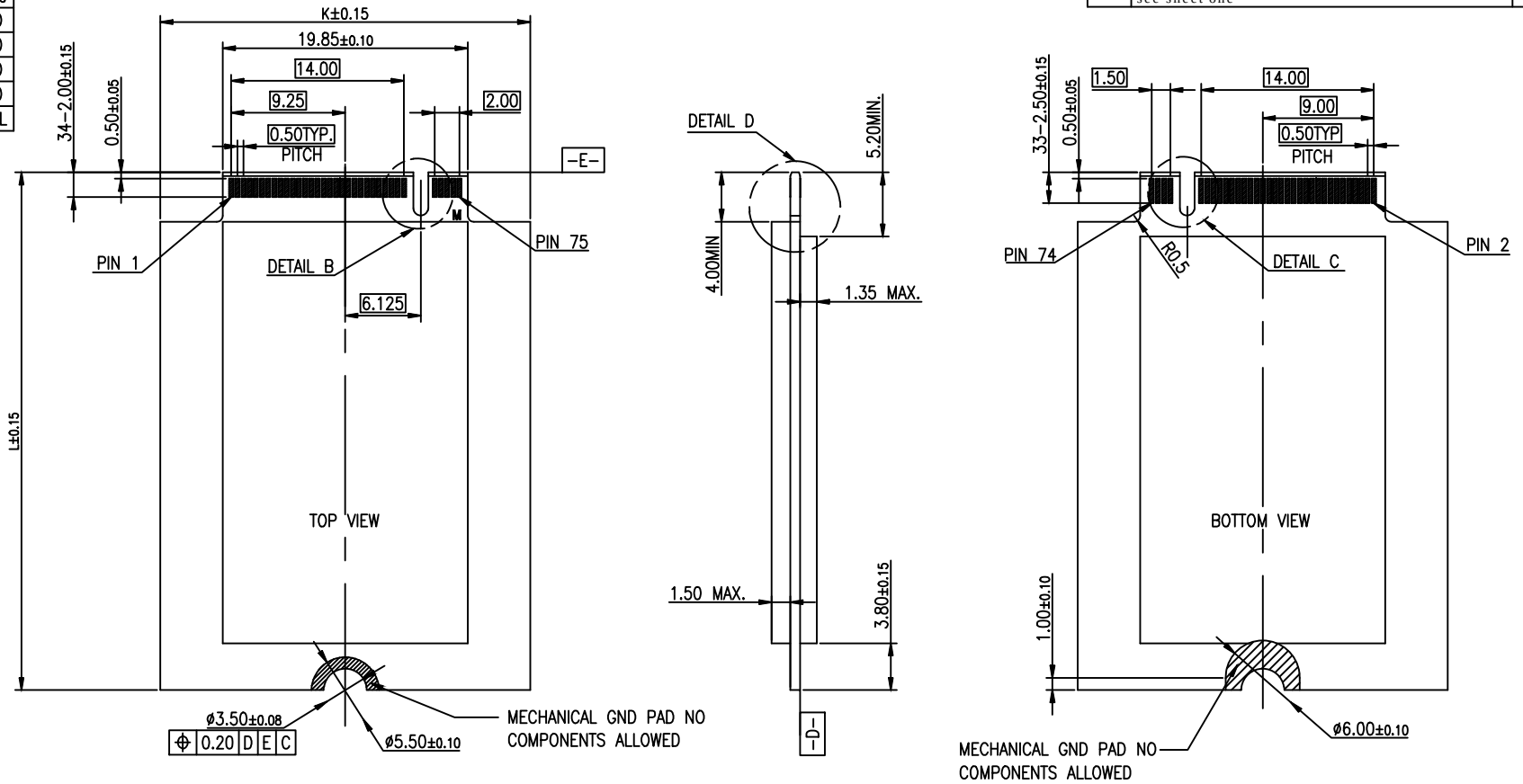


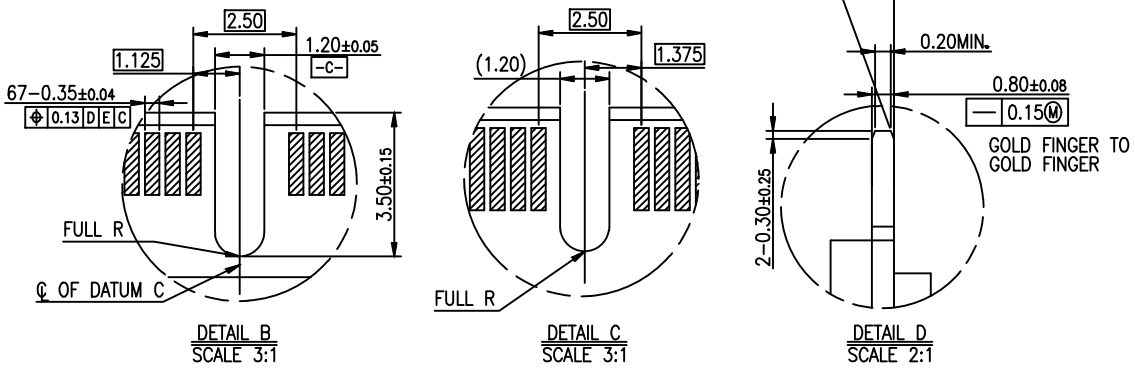


| UNLESS OTHERWISE SPECIFIED TOLERANCE | | | |
|---|---|---|---|
| UNIT: mm | DECIMAL | LINEAR | ANGLES |
| | X. | ±0.50 | ±5° |
| | X.X | ±0.25 | ±3° |
| | X.XX | ±0.12 | ±1° |

ATTEND

www.attend.com.tw

| | | |
|---|---|---|
| DRAWN | Tim | 2021/06/08 |
| CHECKED | Fros | 2021/06/08 |
| APPROVED | Ken | 2021/06/08 |

DRAWN NAME:
M.2 Socket, H5.8 M Key
0.5 Pitch G/F, Black, Reel

| | | | |
|---|---|---|---|
| SCALE N/A | SHEET 3/3 | SIZE A4 | |

| | |
|---|---|
| PRODUCT NO. | 123A-58M01 |
| FILE NAME | 123A-58M01_B_1 |