4DLCD-50800480-IPS Series



Datasheet

Revision 1.7

Copyright © 2026 4D Systems

Content may change at any time. Please refer to the resource centre for latest documentation.

Contents

1. General Specification 4
2. TFT LCD Display Drawing (Non Touch Version) 6
3. TFT LCD Display Drawing (Resistive Touch Version) 7
4. TFT LCD Display Drawing (Capacitive Touch Version) 8
5. TFT LCD Display Drawing (Capacitive Touch Version with Cover Lens Bezel) 9
6. Absolute Maximum Ratings 10
7. Electrical Characteristics 10
8. Electro-Optical Characteristics 11
9. Backlight Characteristics 11
10. Interface Descriptions 14
    10.1. LCD Interface 14
    10.2. CTP Interface 16
11. Backlight Example Circuit 16
12. LCD Timing Details 17
    12.1. Timing Chart 17
    12.2. Timing Characteristic 19
    12.3. SYNC Mode Timing Diagram 19
    12.4. SYNC-DE Mode Timing Diagram 19
    12.5. Reset Timing 20
    12.6. Power On Sequence 20
    12.7. Power-off Sequence 21
13. Reliability Test 22
14. Precautions for Using LCD Modules 22
    14.1. Handing Precautions 22
    14.2. Storage Precautions 24
15. Revision History 24
16. Legal Information 26
    16.1. Proprietary Information 26

16.2. Disclaimer of Warranties & Limitations of Liabilities 26

1. General Specification

4DLCD-50800480-IPS is a colour active matrix LCD module incorporating amorphous silicon TFT IPS (Thin Film Transistor). It is composed of a colour TFT-LCD panel, driver IC, FPC and a back light unit and with/without a Resistive/Capacitive Touch Panel (RTP or CTP), and with/without a Cover Lens Bezel (CLB). The module display area contains 800 x 480 pixels. This product accords with RoHS environmental criterion.

Part Number Details:

4DLCD - 4D Systems LCD Display

50800480 - 5.0 inch, 800 x 480 Resolution

RTP - Resistive

CTP - Capacitive Touch

CLB - Cover Lens Bezel





Specification

ITEM	CONTENTS	UNIT
LCD Type	TFT / Transmissive / IPS	
Size	5.0	Inch
Viewing Direction	ALL	
Display Mode	Normally Black	
LCD (W x H x T)	4DLCD-50800480 : 120.70 x 75.80 x 3.0	mm
	4DLCD-50800480-RTP : 120.70 x 75.80 x 4.2	
	4DLCD-50800480-CTP : 120.70 x 75.80 x 4.63	
	4DLCD-50800480-CTP-CLB : 140.70 x 93.83 x 4.63 (including CLB)	
Active Area (W x H)	108.00 x 64.80	mm
Dot Pitch (W x H)	0.135 x 0.135	mm
Number of Dots (Pixels)	800 (RGB) x 480	
Driver IC	ST7262A	
Backlight Type	18 LEDs	
Surface Luminance	4DLCD-50800480 : 600 (typical)	cd/m2
	4DLCD-50800480-RTP : 510 (typical)	
	4DLCD-50800480-CTP : 540 (typical)	
	4DLCD-50800480-CTP-CLB : 540 (typical)	
Interface Type	Parallel RGB 24-bit	
Color Depth	16.7M	
Pixel Arrangement	RGB Vertical Stripe	
Surface Treatment	AG	
Input Voltage	3.3 (typical)	V
With/Without TP	4DLCD-50800480-IPS - Without TP	
	4DLCD-50800480-IPS-RTP – With Resistive Touch	
	4DLCD-50800480-IPS-CTP - With Capacitive Touch	
	4DLCD-50800480-IPS-CTP-CLB – With Capacitive Touch and Cover Lens Bezel	
Weight	4DLCD-50800480 : 55.2	g
	4DLCD-50800480-RTP : 74.6	
	4DLCD-50800480-CTP : 82.0	
	4DLCD-50800480-CTP-CLB : 98.6	

Note

1. RoHS compliant
2. LCD weight tolerance: ± 5%.

2. TFT LCD Display Drawing (Non Touch Version)

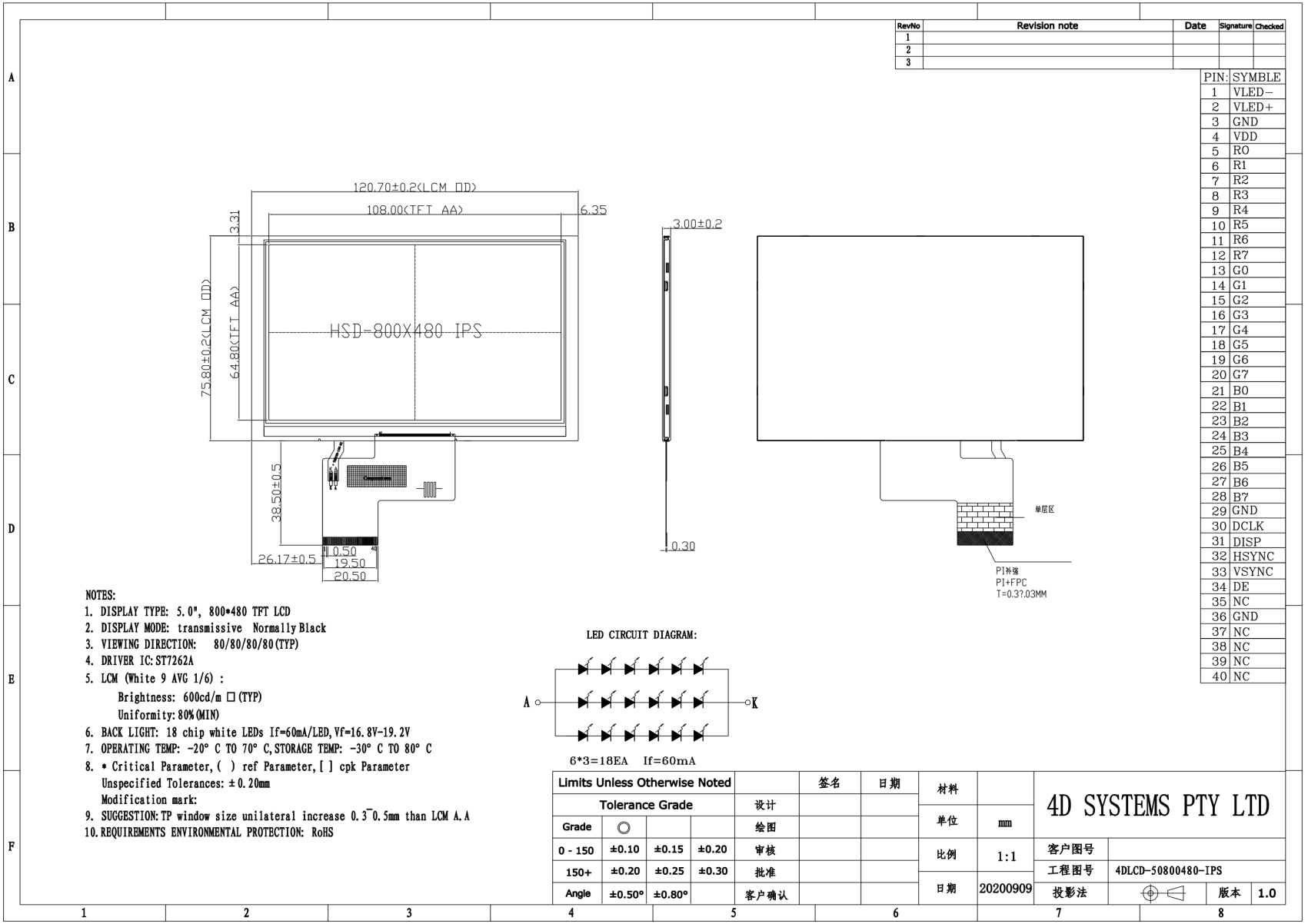

3. TFT LCD Display Drawing (Resistive Touch Version)

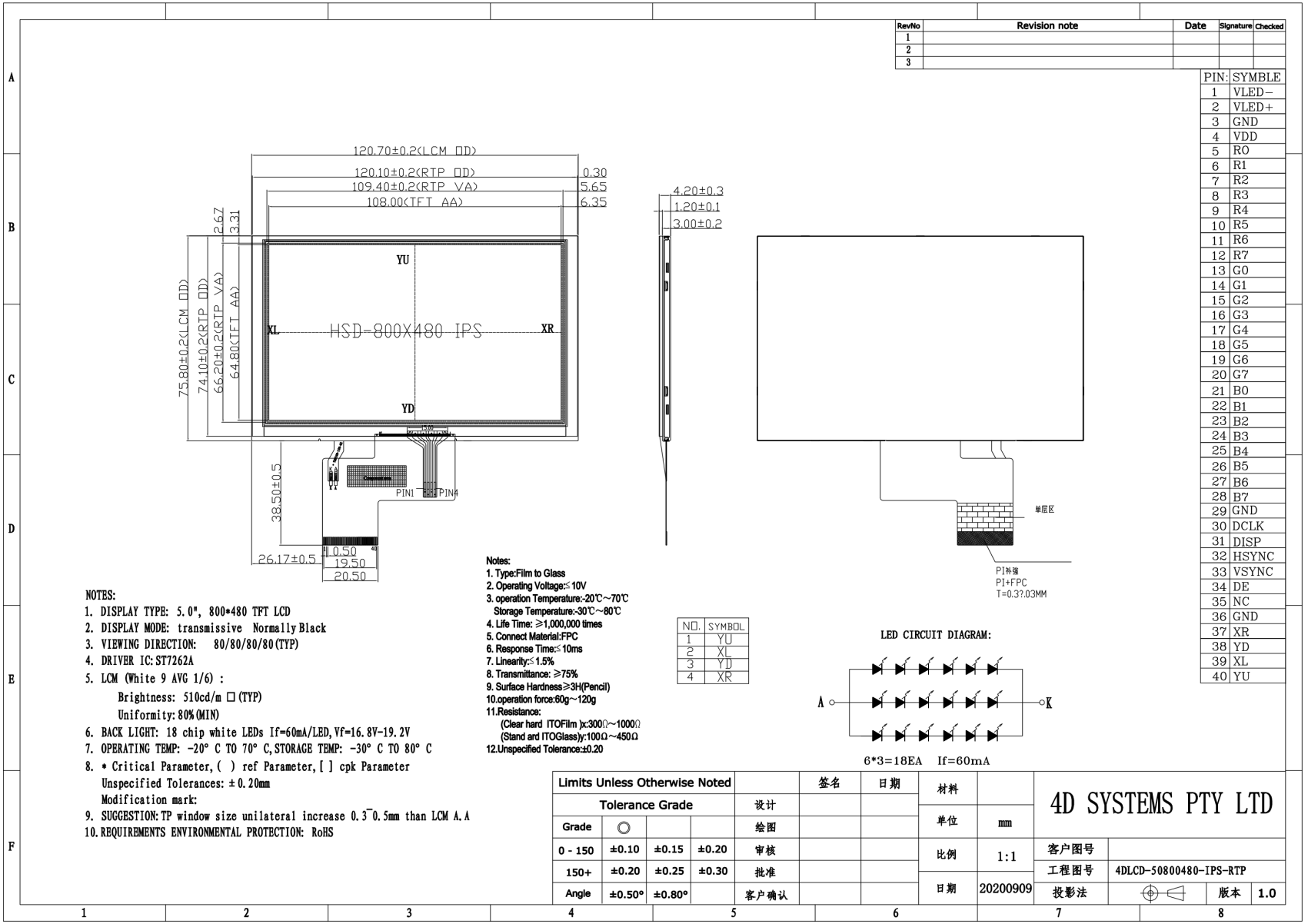

4. TFT LCD Display Drawing (Capacitive Touch Version)

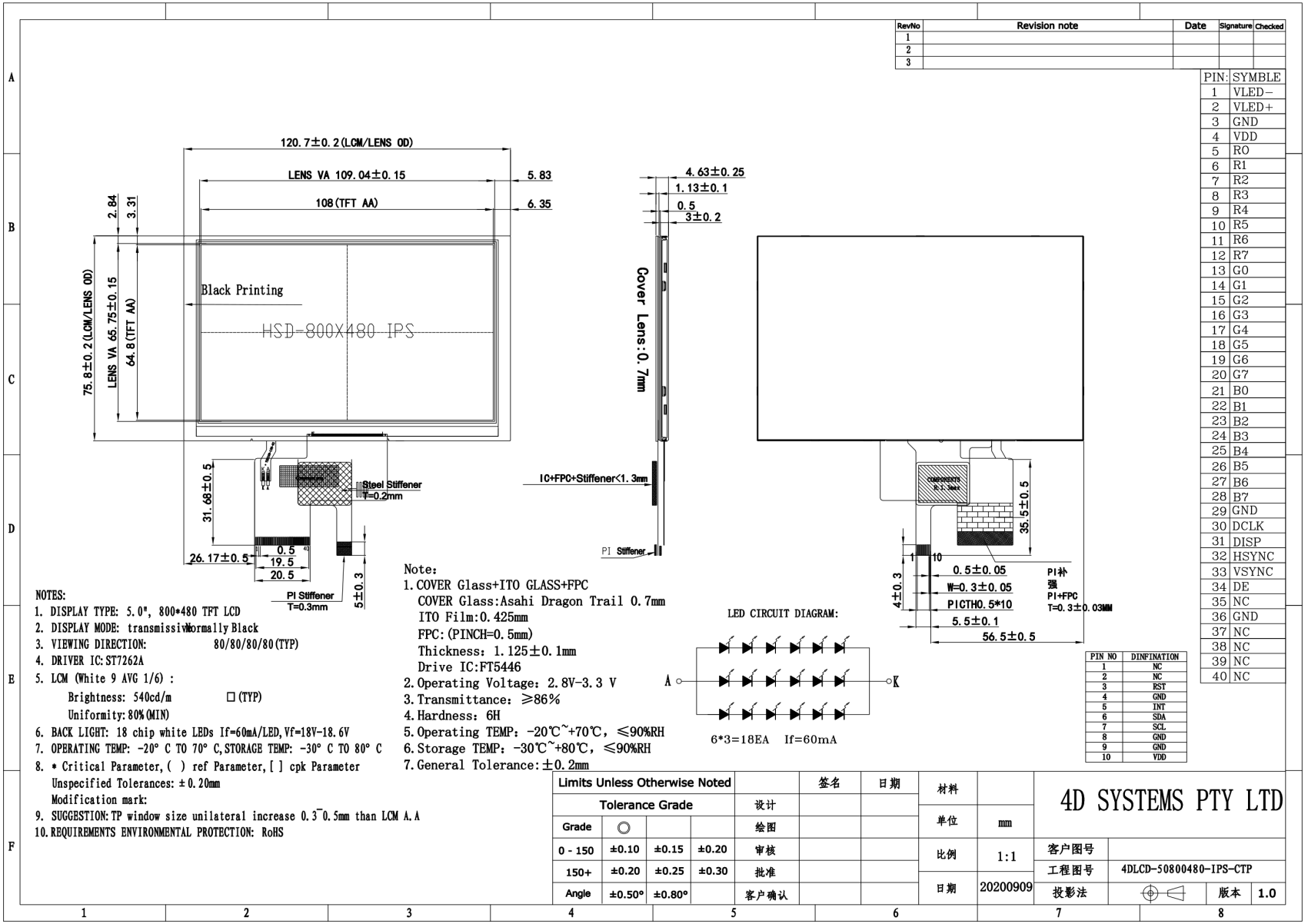

5. TFT LCD Display Drawing (Capacitive Touch Version with Cover Lens Bezel)

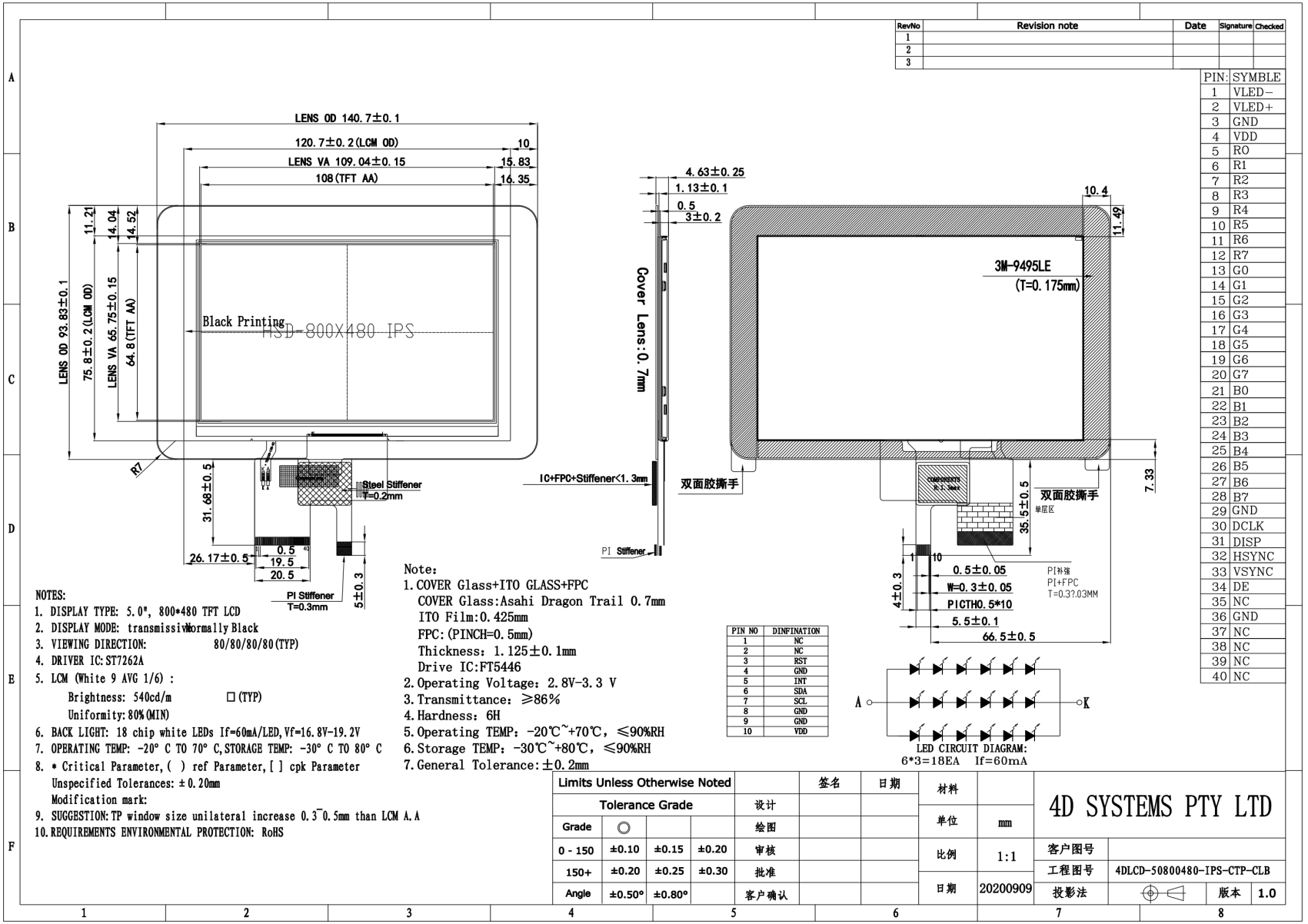

6. Absolute Maximum Ratings

Absolute Maximum Ratings

PARAMETER	SYMBOL	MIN	MAX	UNIT
Supply Voltage for LCD Logic	VDD/VCC	-0.3	4.0	V
Supply Voltage for TP Logic	VDD/VCC-VSS	-	3.6	V
Input Voltage for Logic	VIN	VSS-0.5	VDD	V
LED forward voltage (each LED)	IF	-	25	mA
Operating Temperature	TOP	-20	70	°C
Storage Temperature	TST	-30	80	°C
Humidity	RH	-	90% (Max60°C)	RH

7. Electrical Characteristics

Electrical Characteristics

PARAMETER	SYMBOL	MIN	TYP	MAX	UNIT
Power Voltage	VDD/DCC	2.6	3.3	3.6	V
Input Current	IVDD	-	13	-	mA
Input Voltage 'H' Level	VIH	0.7 VDD	-	VDD	V
Input Voltage 'L' Level	VIL	0	-	0.3 VDD	V

8. Electro-Optical Characteristics

Electro-Optical Characteristics

ITEM	SYM	CONDITION	MIN	TYP	MAX	UNIT	REMARKS
Response Time	Tr+Tf	θ=0	-	30	40	ms	Figure 1(4)
Contrast Ratio	Cr	°	800	1000	-	-	Figure 2(1)
Luminance Uniformity	δ WHITE	∅=0	75	80	-	%	Figure 2(3)
Surface Luminance	Lv	4DLCD-50800480	-	600	-	cd/ m2	Figure 2(2)
		4DLCD-50800480-RTP	-	510	-		
		4DLCD-50800480-CTP	-	540	-		
		4DLCD-50800480-CTP-CLB	-	540	-		
Viewing Angle Range	θ	∅ = 90°	70	80	-	deg	Figure 3(6)
		∅ = 270°	70	80	-	deg	
		∅ = 0°	70	80	-	deg	
		∅ = 180°	70	80	-	deg	
CIE (x,y) Cromacity - Red	x			0.629			
	y			0.326			
CIE (x,y) Cromacity - Green	x	θ=0°		0.337			
	y	∅=0°	-0.1	0.546	+0.1		Figure 2(5)
CIE (x,y) Cromacity - Blue	x	Ta=25		0.136			
	y			0.143			
CIE (x,y) Cromacity - White	x			0.320			
	y			0.345			

9. Backlight Characteristics

Backlight Characteristics

PARAMETER	SYMBOL	MIN	TYP	MAX	UNIT
Voltage for LED backlight (each LED)	VI	2.8	3.0	3.2	V
Voltage for LED backlight (entire String – 18 LED's)	VISTRING	16.8	18.0	19.2	V
Current for LED backlight (each LED)	II	-	20	25	mA
Current for LED backlight (entire String – 18 LED's)	IISTRING	-	60	75	mA
LED Lifetime	-	30000	-	-	Hrs

Note

The LED lifetime is defined as the module brightness decreasing to 50% original brightness at Ta=25°C.

1. Contrast Ratio(CR) is defined mathematically as below, for more information see Figure 1.

$$\text{Contrast Ratio} = \frac{\text{Average Surface Luminance with all white pixels (P1, P2, P3, P4, P5)}}{\text{Average Surface Luminance with all black pixels (P1, P2, P3, P4, P5)}}$$

2. Surface luminance is the LCD surface from the surface with all pixels displaying white. For more information, see Figure 2.

$$Lv = \text{Average Surface Luminance with all white pixels (P1, P2, P3, P4, P5)}$$

3. The uniformity in surface luminance δ WHITE is determined by measuring luminance at each test position 1 through 5, and then dividing the maximum luminance of 5 points luminance by the minimum luminance of 5 points luminance. For more information, see Figure 2.

$$\delta\text{WHITE} = \frac{\text{Minimum Surface Luminance with all white pixels (P1, P2, P3, P4, P5)}}{\text{Maximum Surface Luminance with all white pixels (P1, P2, P3, P4, P5)}}$$

4. Response time is the time required for the display to transition from white to black (Rise Time, Tr) and from black to white (Decay Time, Tf). For additional information see Figure 1. The test equipment is the Autronic-Melchers ConoScope series.
5. CIE (x, y) chromaticity, the x and y value is determined by measuring luminance at each test position 1 through 5, and then making the average value.
6. Viewing angle is the angle at which the contrast ratio is greater than 2. For the TFT module, the contrast ratio is greater than 10. The angles are determined for the horizontal or x-axis and the vertical or y-axis to the z-axis which is normal to the LCD surface. For more information, see Figure 3.
7. For viewing angle and response time testing, the testing data is based on the Autronic-Melchers ConoScope series. Instruments for Contrast Ratio, Surface Luminance, Luminance Uniformity, and CIE the test data is based on TOPCONs BM-5 photodetector.

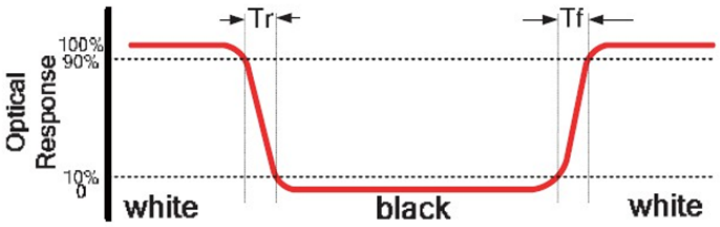

The definition of response time

A : 5 mm
B : 5 mm
H,V : Active Area
Light spot size ∅=5mm, 500mm distance from the LCD surface to detector lens
measurement instrument is TOPCON's luminance meter BM-5

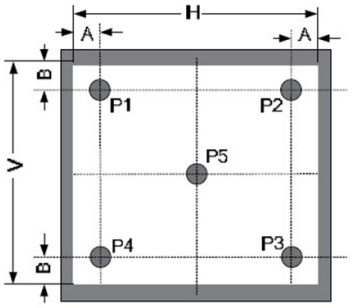

Measuring method for Contrast ratio, surface luminance, Luminance uniformity, CIE (x, y) chromaticity

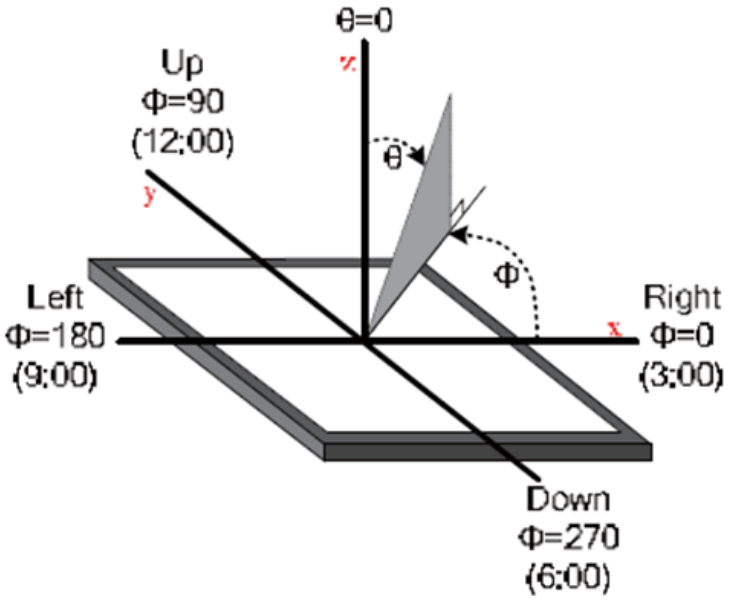

The definition of viewing angle

10. Interface Descriptions

10.1. LCD Interface

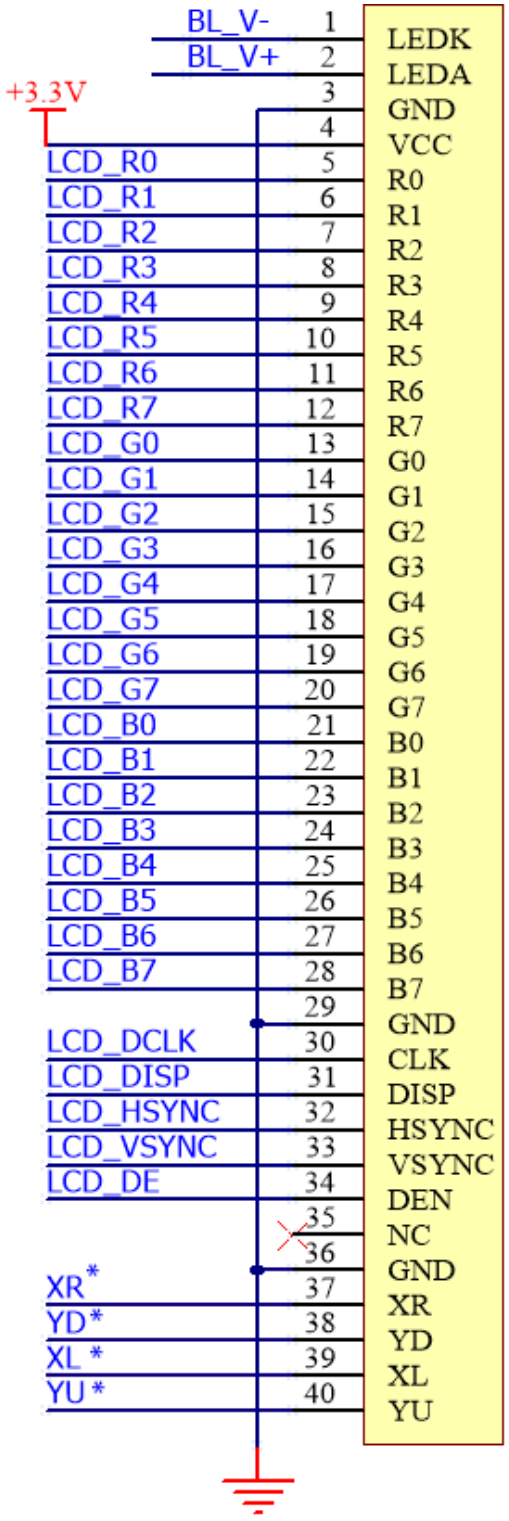

* This has no connection (NC) for Non-touch displays

24 Bit mode

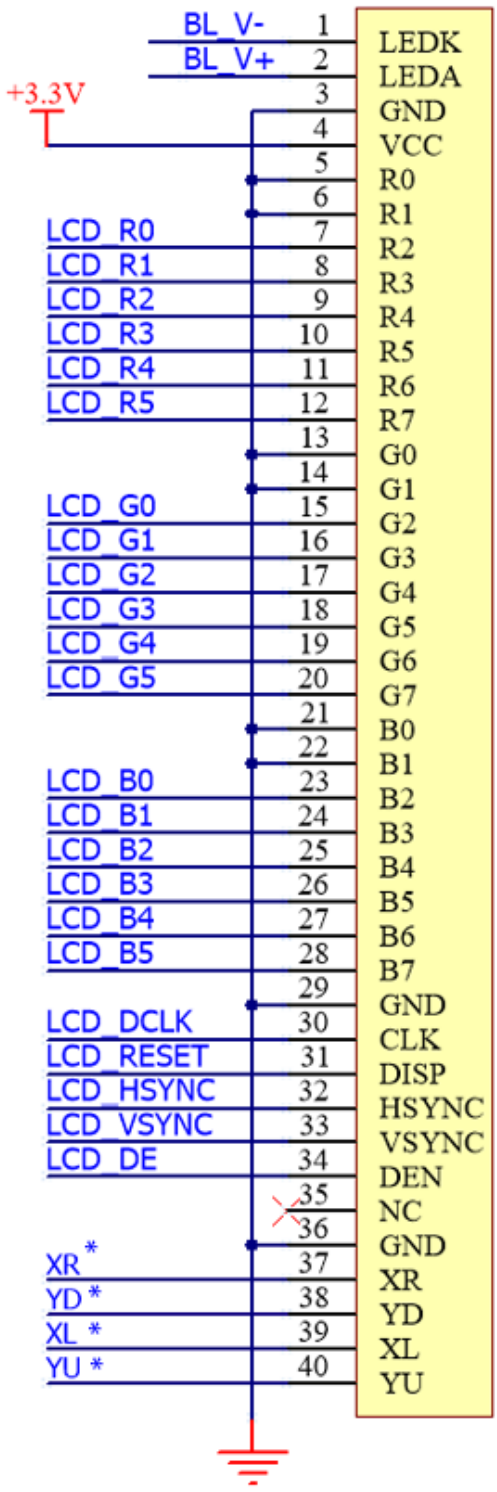

* This has no connection (NC) for Non-touch displays

18 Bit mode

LCD Interface

PIN NO.	SYMBOL	DESCRIPTION
1	LED-	Cathode of LED Backlight
2	LED+	Anode of LED Backlight
3	GND	Ground
4	DVDD	Power supply
5	R0	Red data input R0
6	R1	Red data input R1
7	R2	Red data input R2
8	R3	Red data input R3
9	R4	Red data input R4
10	R5	Red data input R5
11	R6	Red data input R6
12	R7	Red data input R7
13	G0	Green data input G0
14	G1	Green data input G1
15	G2	Green data input G2
16	G3	Green data input G3
17	G4	Green data input G4
18	G5	Green data input G5
19	G6	Green data input G6
20	G7	Green data input G7
21	B0	Blue data input B0
22	B1	Blue data input B1
23	B2	Blue data input B2
24	B3	Blue data input B3
25	B4	Blue data input B4
26	B5	Blue data input B5
27	B6	Blue data input B6
28	B7	Blue data input B7
29	GND	Ground
30	DCLK	Clock for input data. Data latched at rising/falling edge of this signal. Default is falling edge.
31	DISP	Standby mode control. (Normally pull high) STBYB="L", enter standby mode for power saving. Timing controller source driver will turn off, all outputs are Hi-Z. STBYB="H", normal operation.
32	HS	Horizontal sync input
33	VS	Vertical sync input
34	DE	Input data enable control. When DE mode, active High to enable data input (Normally pull low)
35	NC	No Connect
36	GND	Ground

PIN NO.	SYMBOL	DESCRIPTION
37	XR	The touch panel X right pin
38	YD	The touch panel Y down pin
39	XL	The touch panel X left pin
40	YU	The touch panel Y up pin

Note

1. For applications that uses less than 24 bits, RGB data pins (5 to 28) are tied to ground to reduce the total bits used.
2. Pins 37, 38, 39, and 40 are only applicable to resistive touch screen displays (4DLCD-xxxxxxxx-RTP).
3. **Recommended LCD connector:** 40-way, 0.5 mm pitch FFC connector

10.2. CTP Interface

The Capacitive Touch is driven by a **Focaltech FT5446** capacitive touch driver IC, which utilizes an I2C interface, and is capable of 5-point touch.

This is only connected to the CTP Panel, not connected to the LCD itself.

Not applicable for Non-touch and RTP models.

Capacitive Touch Interface

PIN NO.	SYMBOL	DESCRIPTION
1	NC	No Connect
2	NC	No Connect
3	RST	Reset pin
4	GND	Ground
5	INT	Interrupt signal from CTP
6	SDA	I2C SDA
7	SCL	I2C SCL
8	GND	Ground
9	GND	Ground
10	VDD	Power Supply (3.3V)

11. Backlight Example Circuit

The backlight circuit of this LCD needs an appropriate backlight driver. It can not be simply driven directly by a 3.3V or 5.0V supply like smaller displays, this is because of the number of LED's connected in series and parallel, which is known as an LED String. A backlight driver is required to boost the voltage from the input supply to the requirements for the LED string.

There are many backlight driver IC's on the market. Some examples are:

- Texas Instruments TPS61165

- Texas Instruments TPS61080
- On-Semi FAN5333B

On selecting of the backlight driver, ensure it is capable of driving the number of LED's in the string featured in this display, and it supports the input voltage you are looking to supply. Often 3.3V or 5V is possible to supply into the backlight drivers, and it will boost it to the required output based on the requirements of the LED's. The current can then be set with a resistor. Please refer to the datasheet for the selected Driver IC of your choice.

In this example, the TPS61165 is depicted.

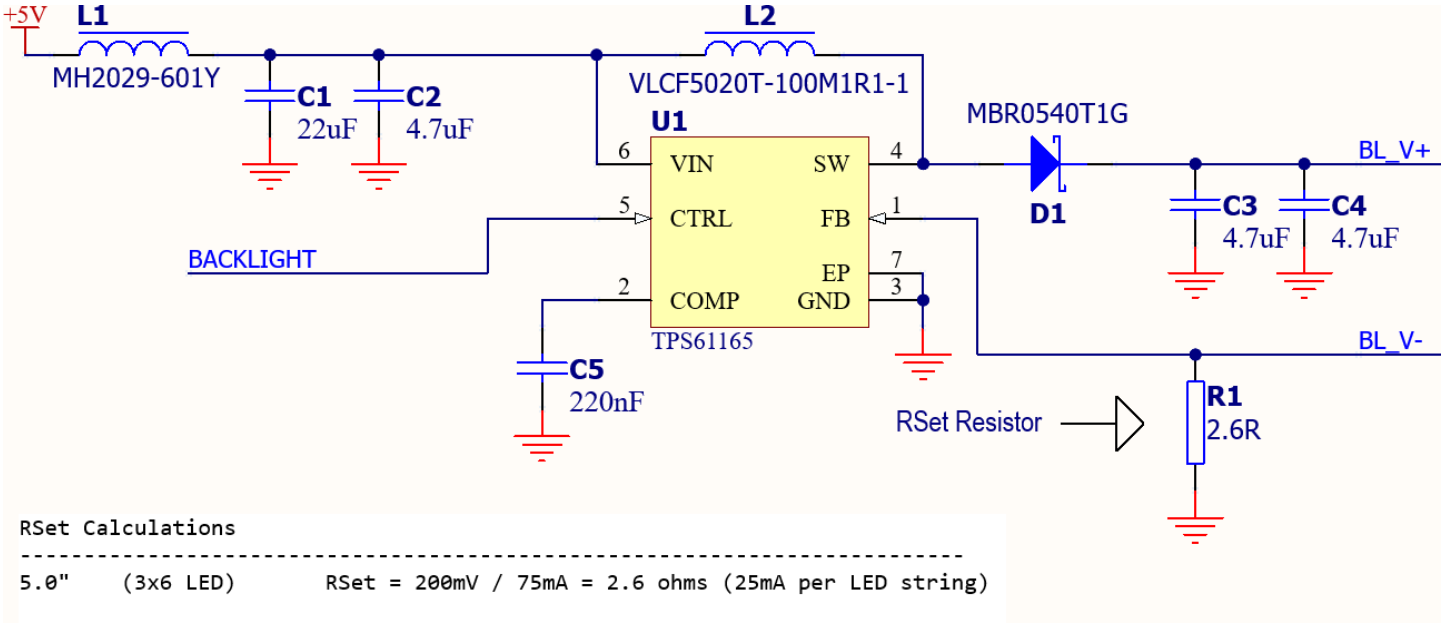

The RSet calculation is found in the Datasheet for the backlight driver. Each one will vary, as well as the circuit and the components required. Please refer to their datasheets.

Refer to Section 9 of this document for information specific to the backlight requirements, as well as the drawing of the display to see the configuration of the backlight LED string.

12. LCD Timing Details

12.1. Timing Chart

PARAMETER	SYMBOL	MIN	TYP	MAX	UNIT	CONDITION
CLK Clock Time	Tclk	1/Max(FCLK)	-	1/Min(FCLK)	ns	-
CLK Pulse Duty	Tchw	40	50	60	%	TCLK
HSYNC to CLK	Thc	-	-	1	CLK	-
HSYNC Width	Thwh	1	-	-	CLK	-
VSYNC Width	Tvwh	1	-	-	ns	-
HSYNC Period Time	Th	60	63.56	67	ns	-
VSYNC Set-up Time	Tvst	12	-	-	ns	-
VSYNC Hold Time	Tvhd	12	-	-	ns	-
HSYNC Setup Time	Thst	12	-	-	ns	-

PARAMETER	SYMBOL	MIN	TYP	MAX	UNIT	CONDITION
HSYNC Hold Time	Thhd	12	-	-	ns	-
Data Set-up Time	Tdsu	12	-	-	ns	D00~D23 to CLK
Data Hold Time	Tdhd	12	-	-	ns	D00~D23 to CLK
DEN Set-up Time	Tesu	12	-	-	ns	DEN to CLK

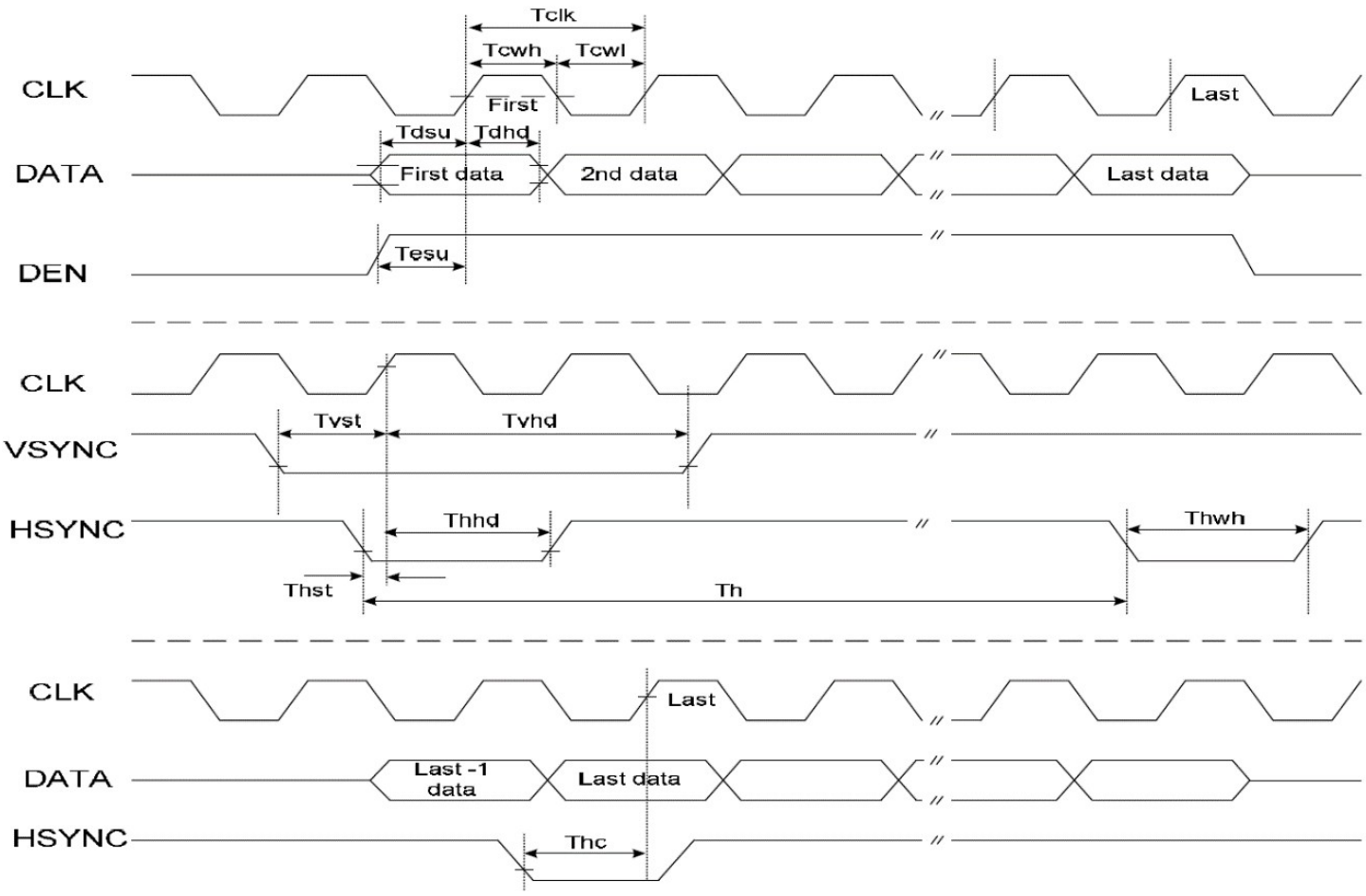

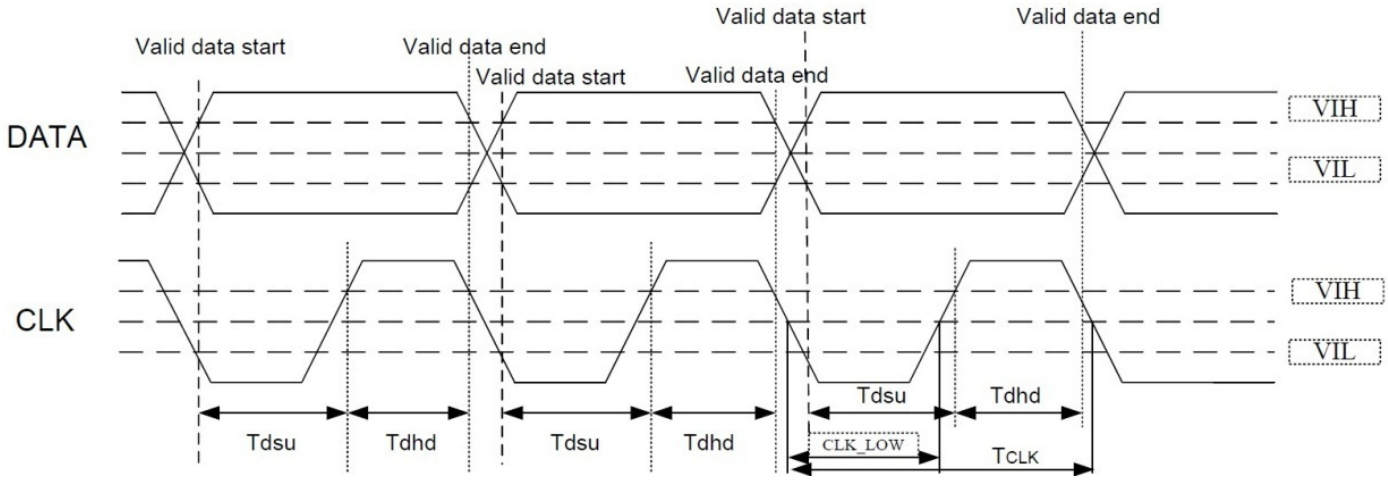

Note

Timing parameter (VDD=3.3V, GND=0V, Ta=25˚C)

12.2. Timing Characteristic

ITEM	SYMBOL	MIN	TYP	MAX	UNIT	
DCLK Frequency	Fclk	23	25	27	MHz	
DCLK Period	Tclk	-	-	-	Ns	
Hsync : Period Time	Th	808	816	896	DCLK	
Hsync : Display Period	Thdisp		800	-	DCLK	
Hsync : Back Porch	Thbp	4	8	48	DCLK	By H BLANKING setting
Hsync : Front Porch	Thfp	4	8	48	DCLK	
Hsync : Pulse width	Thw	2	4	8	DCLK	
Vsync : Period Time	Tv	488	496	504	H	
Vsync : Display Period	TVdisp	-	480	-	H	
Vsync : Back Porch	Tvbp	4	8	12	H	By V BLANKING setting
Vsync : Front Porch	Tvfp	4	8	12	H	
Vsync : Pulse Width	Tvw	2	4	8	H	

12.3. SYNC Mode Timing Diagram

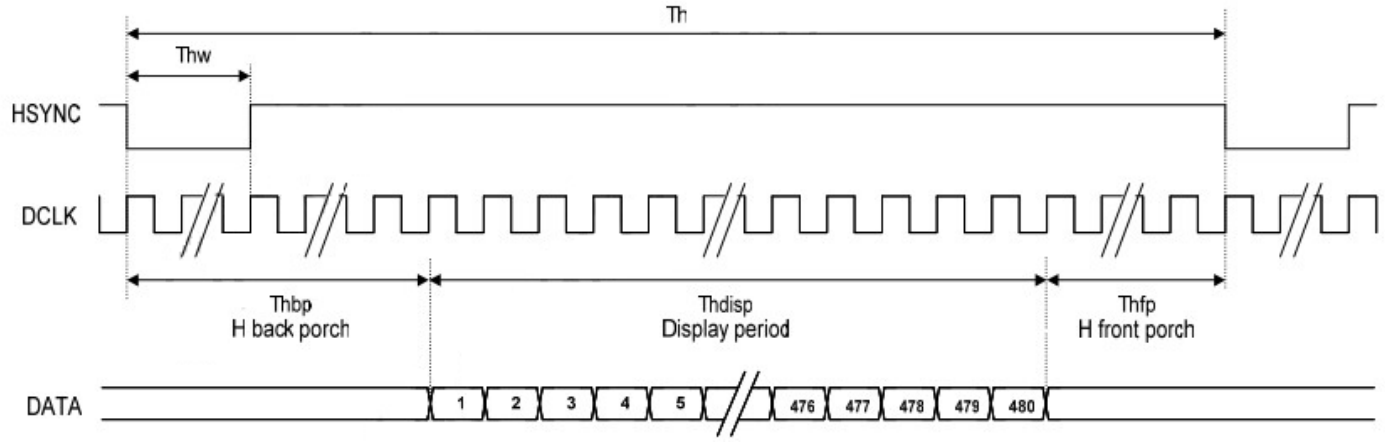

12.4. SYNC-DE Mode Timing Diagram

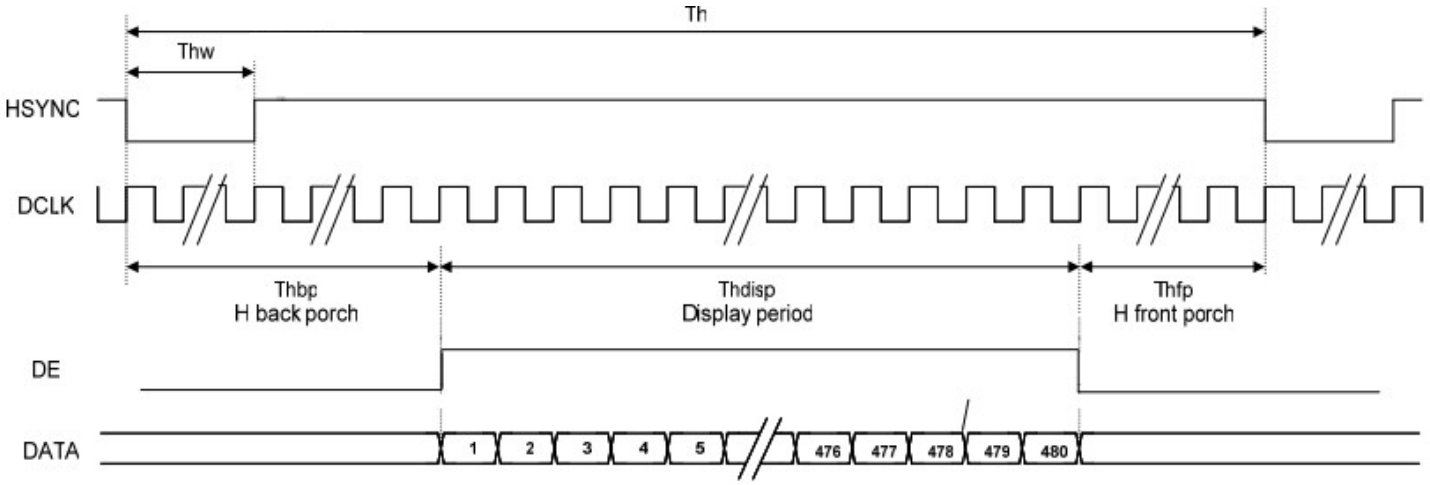

12.5. Reset Timing

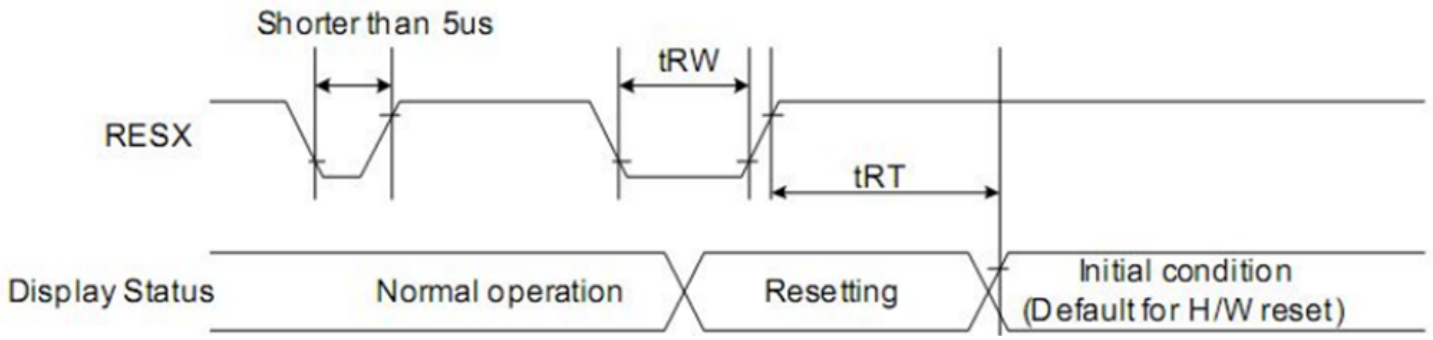

RESX reference refers to RESET, which is the DISP pin on the display, also known as LCD_RESET.

SIGNAL	SYMBOL	PARAMETER	MIN	MAX	UNIT
RESET	tRW	Reset low pulse width	40	-	us
	tRT	Reset complete time	-	5 (note1)	ms
			-	120 (note2)	ms

Note

1. When reset applied during SLPIN mode (Sleep mode on)
2. When reset applied during SLPOUT mode (Sleep mode off)

12.6. Power On Sequence

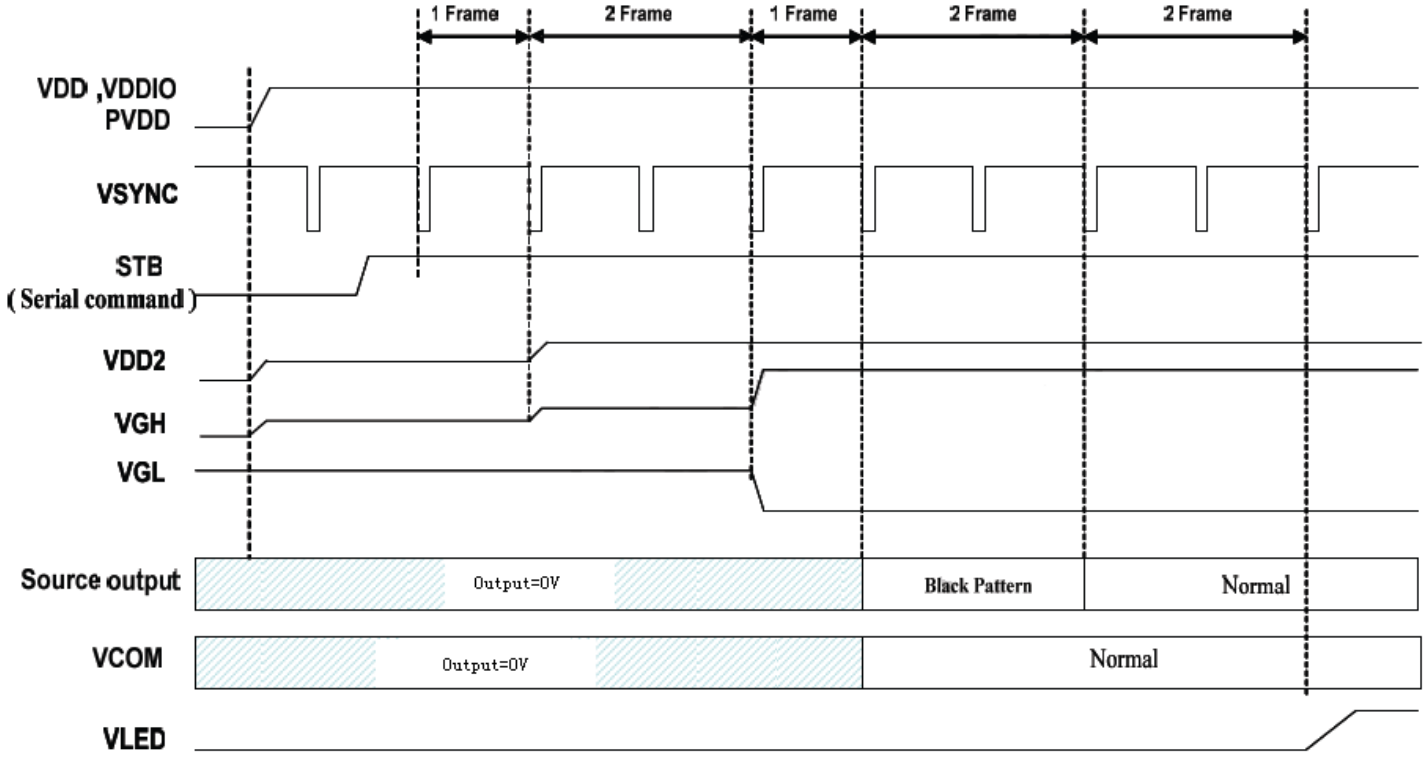

12.7. Power-off Sequence

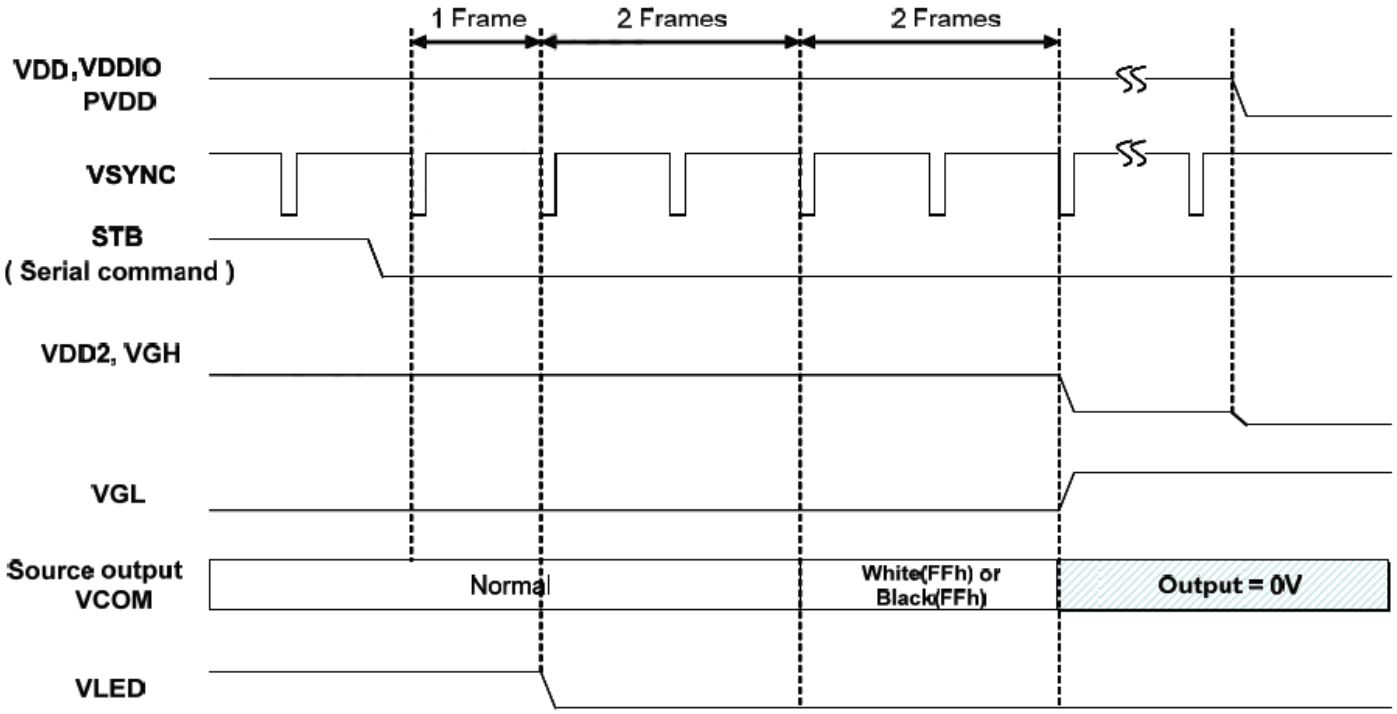

Note

- When normally-black LC is used, please send black pattern to discharge the panel.
- When normally-white LC is used, please send white pattern to discharge the panel.

13. Reliability Test

Reliability Test

No.	SYMBOL	TEST CONDITION	REMARK
1	High Temperature Storage	80°C±2°C 96H Restore 2H at 25°C Power off	
2	Low Temperature Storage	-30°C±2°C 96H Restore 2H at 25°C Power off	
3	High Temperature Operation	70°C±2°C 96H Power on	
4	Low Temperature Operation	-20°C±2°C 96H Power on	
5	High Temperature & Humidity Operation	60°C±2°C 90%RH 96H Power on	After test cosmetic and electrical defects should not happen.
6	Temperature Cycle	-20°C←→25°C←→70°C 30min 5min 30min After 10 cycles, restore 2H at 25°C Power off	
7	Vibration Test	10Hz~150Hz, 100m/s^2, 120min	
8	Shock Test	Half-sinewave, 300m/s^2, 11ms	

Note

The Displays are of the highest rated 'Grade A', which allows for 0-4 defective pixels. A defective pixel could be solid Black (Dead), White, Red, Green or Blue.

14. Precautions for Using LCD Modules

14.1. Handing Precautions

- The display panel is made of glass and a polarizer. The glass is fragile. It tends to be chipped during handling, especially on the edges. Please avoid dropping or jarring. Please be careful not subject it to a mechanical shock by dropping it on impact.
- If the display panel is damaged and the liquid crystal substance leaks out, be sure not to get any of it in your mouth. If the substance contacts your skin or clothes, wash it off using soap and water.
- Do not apply excessive force to the display surface or the adjoining areas since this may cause the color tone to vary. Do not touch the display with bare hands. This will stain the display area and degrade insulation between terminals (some cosmetics are determined by the polarizer).

- The polarizer covering the display surface of the LCD module is soft and easily scratched. Handle this polarizer carefully. Do not touch, push or rub the exposed polarizer with anything harder than an HB pencil lead (e.g., glass, tweezers, etc.). Do not put or attach anything to the display area to avoid leaving marks on it. Condensation on the surface and contact with terminals due to cold temperatures will damage, stain or contaminate the polarizer. After products are tested at low temperatures they must be warmed up in a container before coming into contact with room-temperature air.
- If the display surface becomes contaminated, breathe on the surface and gently wipe it with a soft dry cloth. If it is heavily contaminated, moisten the cloth with one of the following solvents
    - Isopropyl alcohol
    - Ethyl alcohol
      Do not scrub hard as it might damage the display surface.
- Solvents other than those mentioned above may damage the polarizer. Especially the following.
    - Water
    - Ketone
    - Aromatic solvents
      Wipe off saliva or water drops immediately, contact with water over a long period may cause deformation or color fading. Avoid contact with oil and fat.
- Take necessary precautions to minimize corrosion of the electrode. Corrosion of the electrodes is accelerated by water droplets, moisture condensation or current flow in a high-humidity environment.
- Do not attempt to disassemble or process the LCD module.
- NC terminal should be open. Do not connect anything to it.
- If the logic circuit power is off, do not apply input signals.
- Control Electro-Static Discharge. Since this module uses a CMOS LSI, the same careful attention should be paid to electrostatic discharge as for an ordinary CMOS IC. To prevent the destruction of the elements by static electricity, ensure that an optimum work environment is maintained.
    - Before removing the LCM from its packing case or incorporating it into a set, be sure that the module and your body have the same electric potential. Be sure to ground your body when handling the LCD modules.
    - To reduce the amount of static electricity generated, do not conduct assembly and other work under dry conditions. To reduce the generation of static electricity, please ensure that the air in the work environment is not too dry. Relative humidity of 50%-60% is recommended. As much as possible, make the electric potential of your work clothes and that of the workbench the ground potential.

- The LCD module is coated with a film to protect the display surface. Be careful when peeling off this protective film since static electricity may be generated.

- Since the LCM has been assembled and adjusted with a high degree of precision, avoid applying excessive shocks to the module or making any alterations or modifications to it.
  - Do not alter, modify or change the shape of the tab on the metal frame.
  - Do not make extra holes on the printed circuit board, modify its shape or change the positions of the components to be attached.
  - Do not damage or modify the pattern writing on the printed circuit board.
  - Do not modify the zebra rubber strip (conductive rubber) or heat seal connector.
  - Do not drop, bend or twist the LCM.

14.2. Storage Precautions

When storing the LCD modules, the following precautions are necessary.

- Store them in a sealed polyethylene bag. If properly sealed, there is no need for the desiccant.
- Store them in a dark place. Do not expose to sunlight or fluorescent light, keep the temperature between 0°C and 35°C, and keep the relative humidity between 40%RH and 60%RH.
- The polarizer surface should not come in contact with any other objects. We advise you to store them in an anti-static electricity container in which they were shipped. Some Liquid crystals solidify under low temperatures (below the storage temperature range) leading to defective orientation or the generation of air bubbles (black or white). Air bubbles may also be generated if the module is subjected to low temperatures.
- If the LCD modules have been operating for a long time showing the same display patterns, the display patterns may remain on the screen as ghost images and a slight contrast irregularity may also appear. A normal operating status can be regained by suspending use for some time. It should be noted that this phenomenon does not adversely affect performance reliability.
- To minimize the performance degradation of the LCD modules resulting from the destruction caused by static electricity etc., please avoid holding the following sections when handling the modules'
  - The exposed area of the printed circuit board
  - Terminal electrode sections

15. Revision History

Document Revision

Revision Number	Date	Description
1.2	22/02/2021	Initial Version of IPS Datasheet
1.3	23/06/2021	Added logic current consumption data, added backlight circuit example.
1.4	06/10/2021	Changed Reset timing value from 120ms to 150ms.
1.5	17/10/2023	Modified datasheet for web-based documentation
1.6	02/04/2025	Remove irrelevant precaution related to mounting ears
1.7	15/10/2025	Fix LCD / CTP Interface table formatting

16. Legal Information

16.1. Proprietary Information

The information contained in this document is the property of 4D LCD Pty. Ltd.; these may be the subject of patents pending or granted, and must not be copied or disclosed without prior written permission. 4D LCD endeavors to ensure that the information in this document is correct and fairly stated but does not accept liability for any error or omission. The development of 4D LCD products and services is continuous and published information may not be up to date. It is important to check the current position with 4D LCD. 4D LCD reserves the right to modify, update or makes changes to Specifications or written material without prior notice at any time.

All trademarks belong to their respective owners and are recognised and acknowledged.

16.2. Disclaimer of Warranties & Limitations of Liabilities

4D LCD Pty Ltd makes no warranty, either expressed or implied with respect to any product, and specifically disclaims all other warranties, including but without limitation to; warranties for merchantability, non-infringement and fitness for any particular purpose.

Information contained in this publication regarding device applications and the like is provided only for your convenience and may be superseded by updates. It is your responsibility to ensure that your application meets with your specifications.

Images and graphics used throughout this document are for illustrative purposes only. All images and graphics used are possible to be displayed on the 4D LCD range of products, however the quality may vary.
In no event shall 4D LCD be liable to the buyer or to any third party for any indirect, incidental, special, consequential, punitive or exemplary damages (including but without limitation to; lost profits, lost savings, or loss of business opportunity) arising out of or relating to any product or service provided or to be provided by 4D LCD, or the use or inability to use the same, even if 4D LCD has been advised of the possibility of such damages.
4D LCD products are not fault tolerant nor designed, manufactured or intended for use or resale as on line control equipment in hazardous environments requiring fail - safe performance, such as in the operation of nuclear facilities, aircraft navigation or communication systems, air traffic control, direct life support machines or weapons systems in which the failure of the product could lead directly to death, personal injury or severe physical or environmental damage ('High Risk Activities'). 4D LCD and its suppliers specifically disclaim any expressed or implied warranty of fitness for High Risk Activities.

Use of 4D LCD products and devices in 'High Risk Activities' and in any other application is entirely at the buyer's risk, and the buyer agrees to defend, indemnify and hold harmless 4D LCD from any and all damages, claims, suits, or expenses resulting from such use. No licenses are conveyed, implicitly or otherwise, under any 4D LCD intellectual property rights.