antenna conceptor

Product Datasheet

2JM0501F

GNSS Ceramic Active Antenna

Key Features

GPS/QZSS/Galileo
- 1575 MHz
Embedded Antenna
28 dB Gain
Mid-Filter
Low Noise Figure
Low Power Consumption
Ground Plane Independent
Dimensions 18 x 18 x 6.5 mm

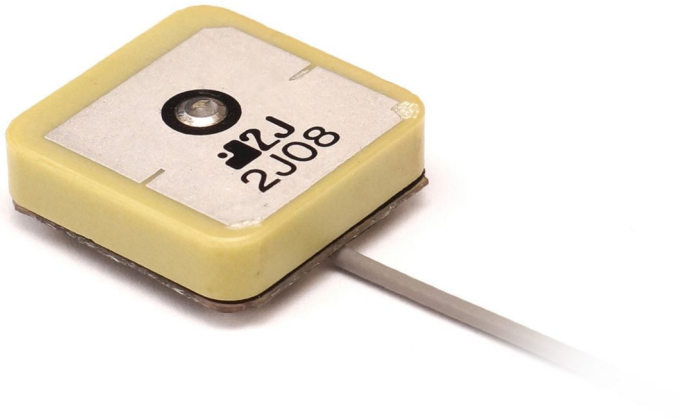

1. Antenna and electrical specifications

Parameters	GNSS Ceramic Active Antenna
Standards	GPS/QZSS/Galileo
Bands (MHz)	1575
Frequency (MHz)	1575.42
Passive Gain (dBi)	~3.6
Impedance (Ohms)	50
Radiation Pattern	Hemispherical
Voltage Range (V)	1.5 - 3.6
Active Gain (dB)	28 @ 2.7 V
Noise Figure (dB)	1 @ 2.7 V
Current Consumption (mA)	9 @ 2.7 V
Power Consumption (mW)	24.3 @ 2.7 V
Saw Filter Type	Mid-Filter
Out of Band Rejection (dB)	43
ESD Protection (kV)	2
Connector Type	U.FL Standard (Other Connectors Available)
Cable Length	100 mm Standard (Any Cable Length Available)
Cable Type	1.37 mm Mini-Coax Standard (Other Cables Available)

2. Mechanical and environmental specifications

Specifications	2JM0501F
Dimensions (mm)	18 × 18 × 6.5
Operating Temperature (C)	-40 to +85
Storage Temperature (C)	-40 to +85
Substance Compliance	RoHS

3. Antenna parameters

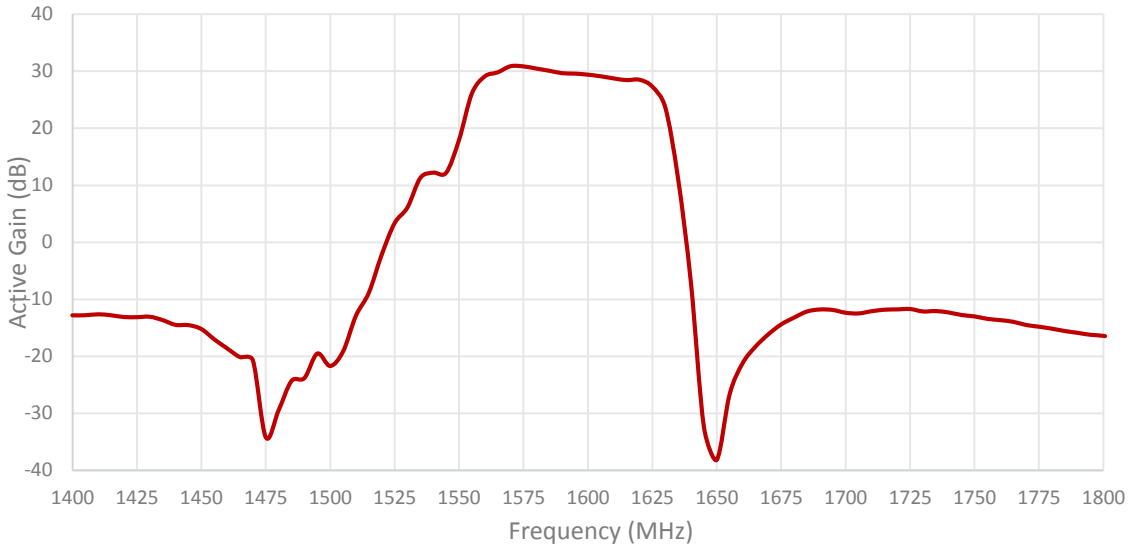

* Measured at 2.7 V

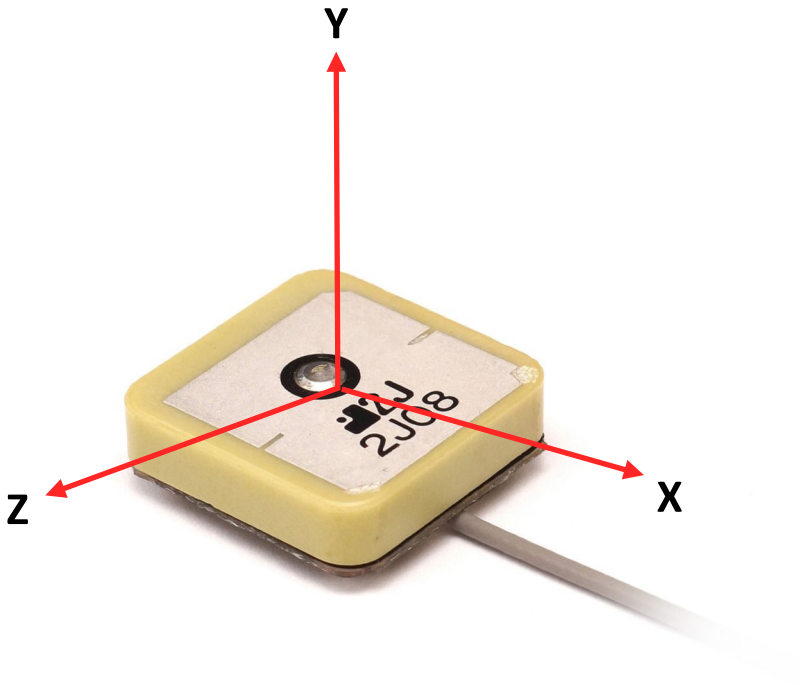

Radiation pattern reference

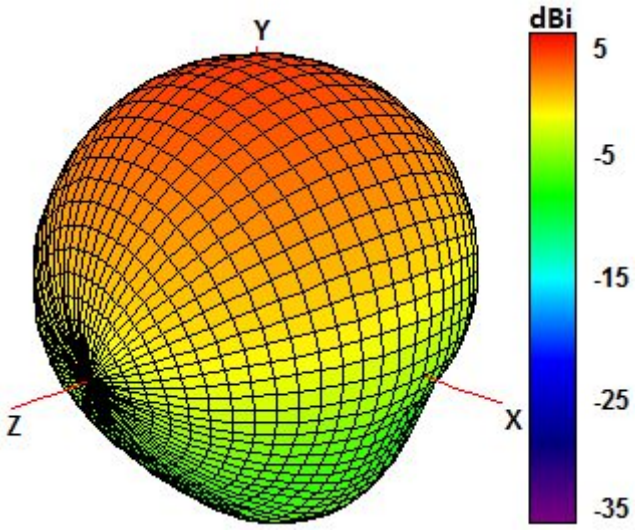

1575 MHz Radiation pattern

4. Antenna drawings

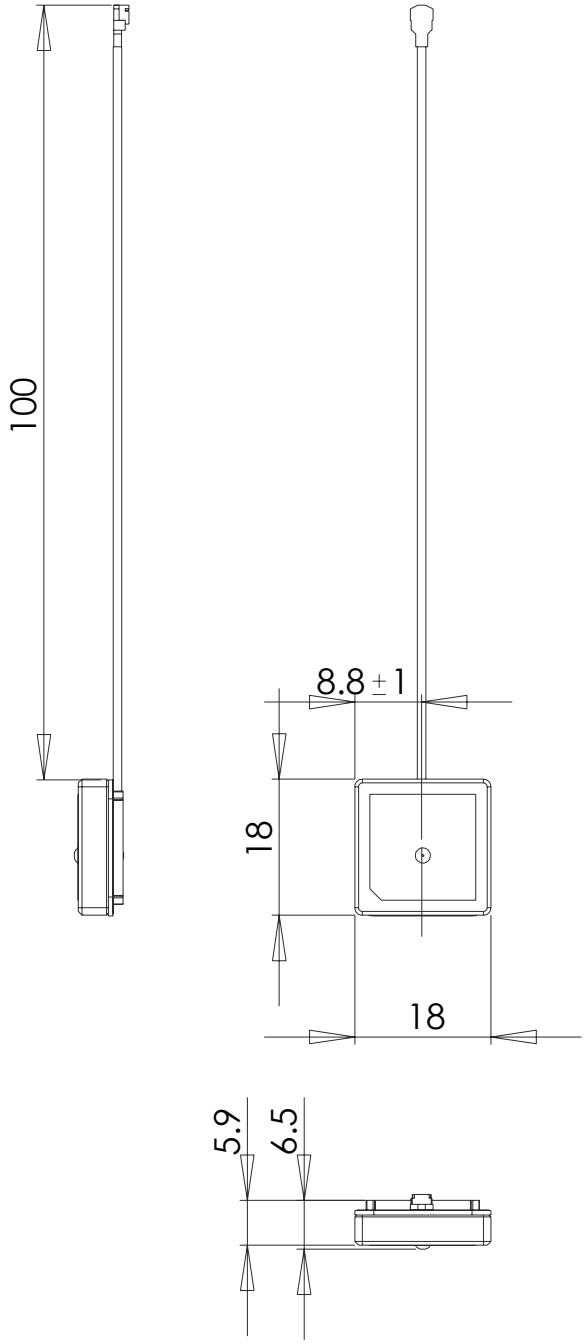

5. Antenna Images

