antenna conceptor

Product Datasheet

2J7541BG

CELLULAR / LTE and GPS/GLONASS Screw Mount

Key Features

Cable 1: CELLULAR / LTE
- 698-960 MHz
- 1710-2170 MHz
- 2500-2700 MHz

Cable 2: GPS/GLONASS
- 1575-1610 MHZ

Screw Mount
High Performance
Ground Plane Dependent
Customizable Cable and Connector
Dimensions ø 60 x 81 mm
Certificates IP67, IP69K



1. Antenna and electrical specifications

Cable 1

Parameters	CELLULAR / LTE Antenna		
Standards	2G,3G and 4G		
Band (MHz)	700/850/900	1700/1800/1900/2100	2600
Frequency (MHz)	698-960	1710-2170	2500-2700
Return Loss (dB)	~-11.6	~-13.0	~-15.2
VSWR	~2.1:1	~1.6:1	~1.5:1
Efficiency (%)	~57	~53	~46
Peak Gain (dBi)	~1.3	~2.0	~2.6
Average Gain (dB)	~-2.4	~-2.7	~-3.3
Impendance (Ohm)	50		
Polarisation	Linear		
Radiation Pattern	Omni-Directional		
Max. Input Power (W)	25		
Connector Type	SMA-Male Standard (Other Connectors Available)		
Cable Length	300 cm Standard (Any Cable Length Available)		
Cable Type	D302 Standard (Other Cables Available)		

Cable 2

Parameters	GPS/GLONASS Antenna	
Standard	GPS / GLONASS	
Band (MHz)	1575	1602
Frequency(MHz)	1575.42	1598-1610
Return Loss (dB)	<-20	
VSWR	<1.2:1	
Impedance	50	
Radiation Pattern	Hemispherical	
Polarization	RHCP	
Saw Filter	No Filter	
Active Gain (dB)	26 @ 3V / 27dB @ 5V	
Noise Figure (dB)	1.5	
Voltage (V)	2.7 – 5.5	
Current (mA)	15 - 25	
Power Consumption (mW)	40 - 137	
Connector Type	Most RF Connectors (SMA-Male Standard)	
Cable Length	Any Cable Length (200cm Standard)	
Cable Type	Other Cables Available (RG174 Standard)	

Antenna Measurement Conditions:

Mounted on 30 x 30 cm Metal Plate

200 cm of Cable D302

Measured in Certified CTIA 3D Anechoic Chamber

2. Mechanical and environmental specifications

Specifications	2J7541BG
Mounting Type	Screw Mount
Dimensions (mm)	Ø 60 × 81
Max. Tighten Torque (Nm)	6 Nm
Radome	ASA
Radome color	Black
Antenna Base	Zamak
Gasket	TPE
Operating Temperature (C)	-40 to +85
Storage Temperature (C)	-40 to +85
Substance Compliance	RoHS
Certificates	IP67, IP69K

3. Antenna parameters

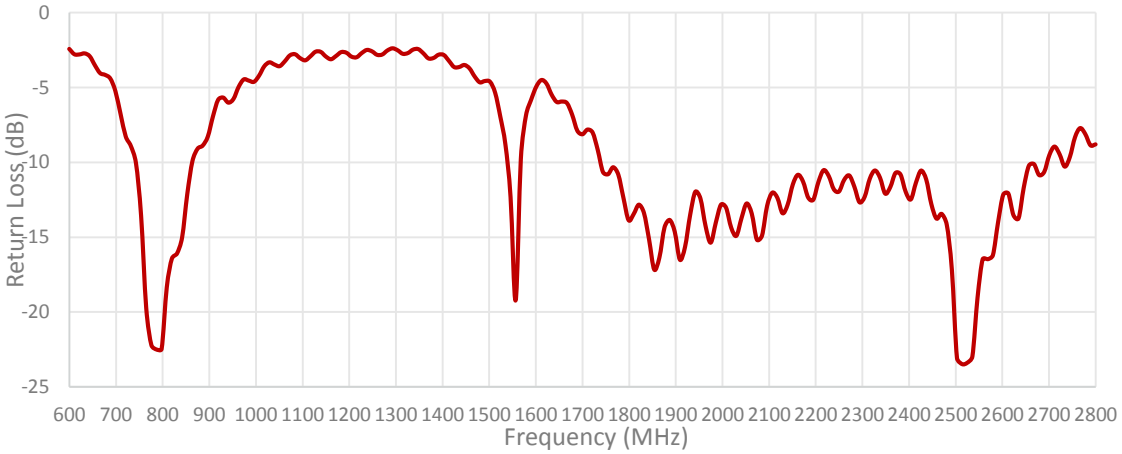

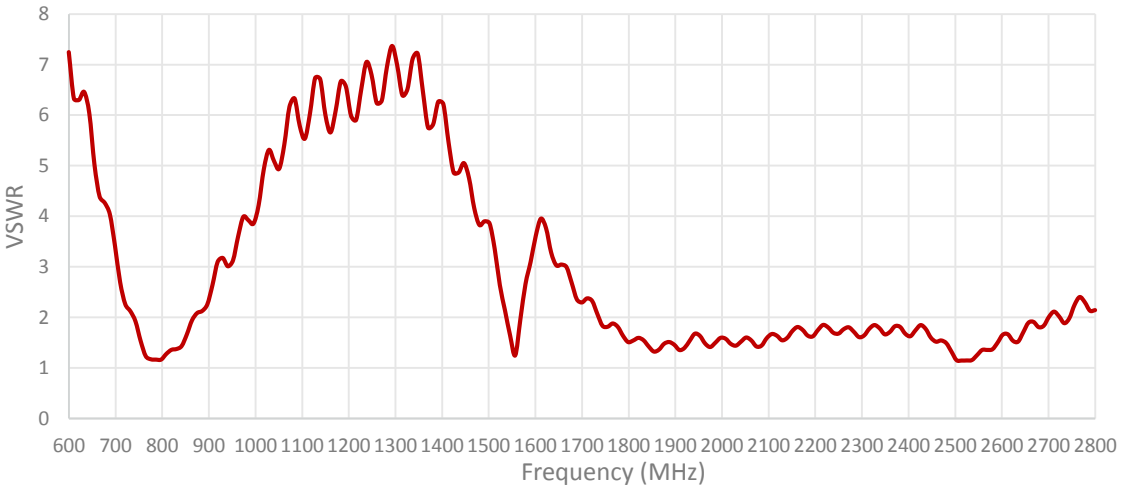

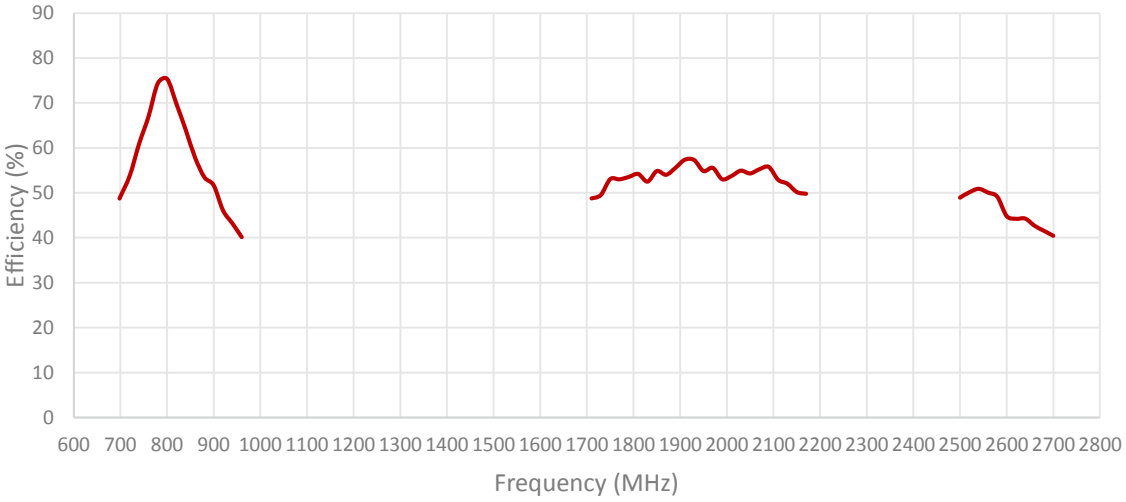
Efficiency (%)
90
80
70
60
50
40
30
20
10
0
600 700 800 900 1000 1100 1200 1300 1400 1500 1600 1700 1800 1900 2000 2100 2200 2300 2400 2500 2600 2700 2800
Frequency (MHz)

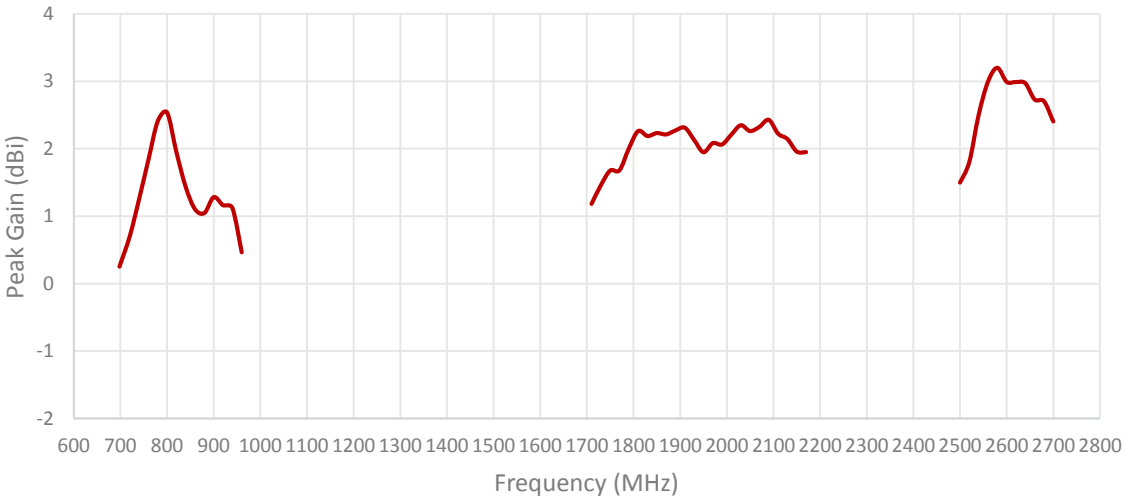
Peak Gain (dBi)
4
3
2
1
0
-1
-2
600 700 800 900 1000 1100 1200 1300 1400 1500 1600 1700 1800 1900 2000 2100 2200 2300 2400 2500 2600 2700 2800
Frequency (MHz)

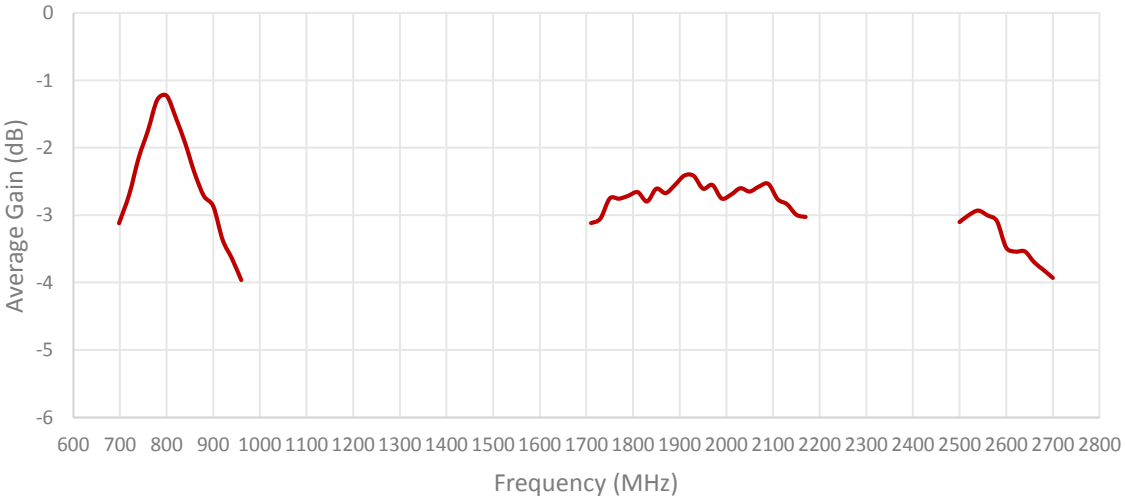

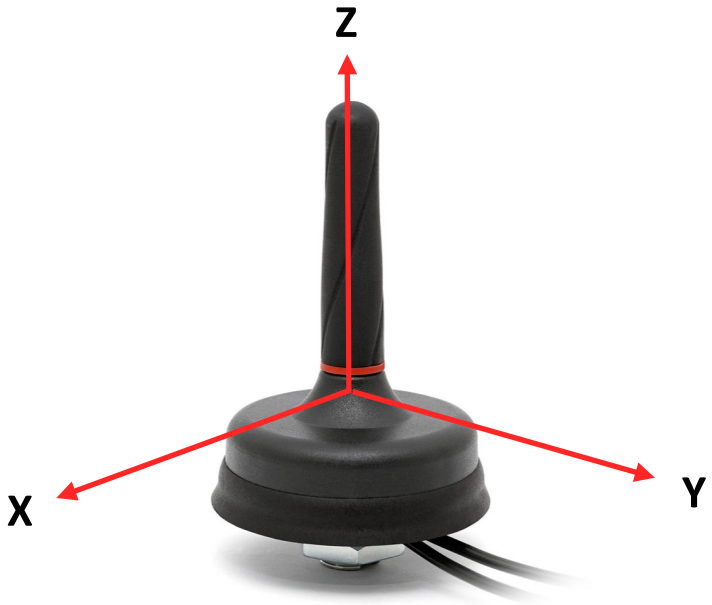

Radiation pattern reference

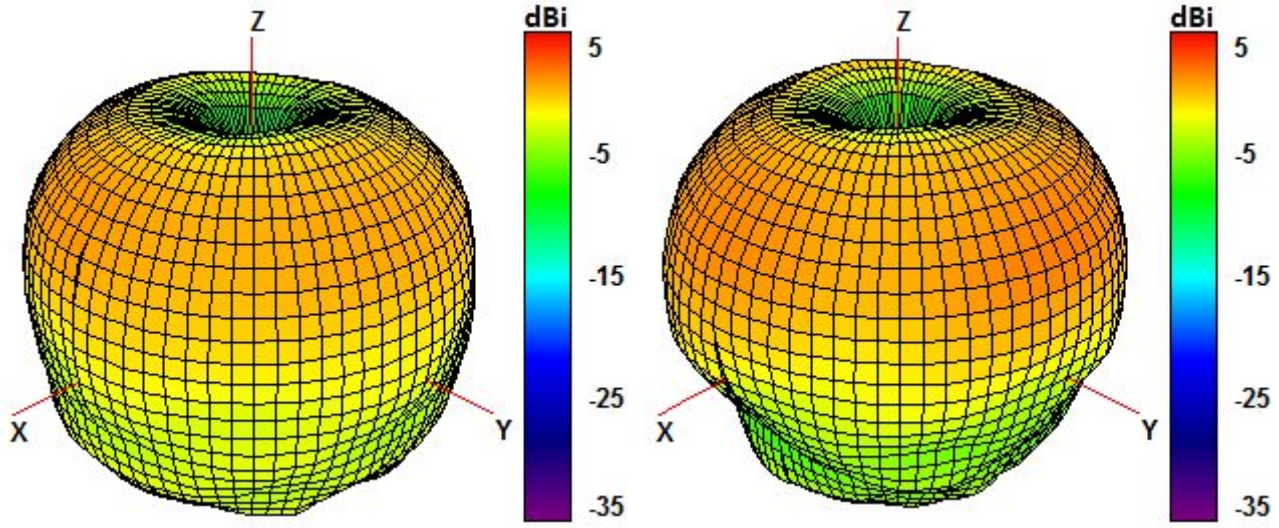

750 and 850 MHz Radiation pattern

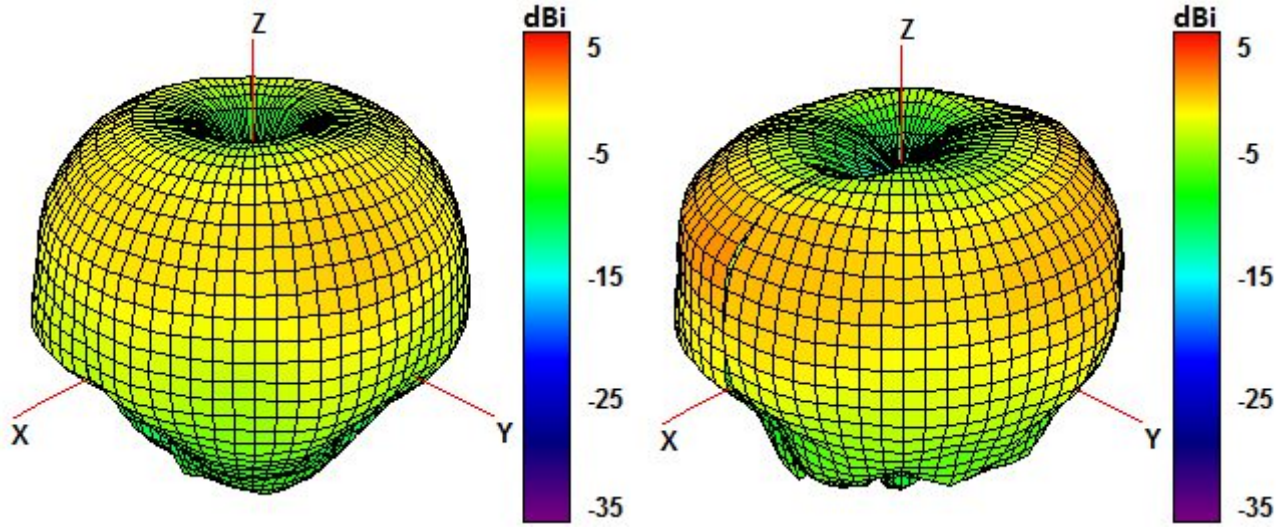

940 and 1750 MHz Radiation pattern

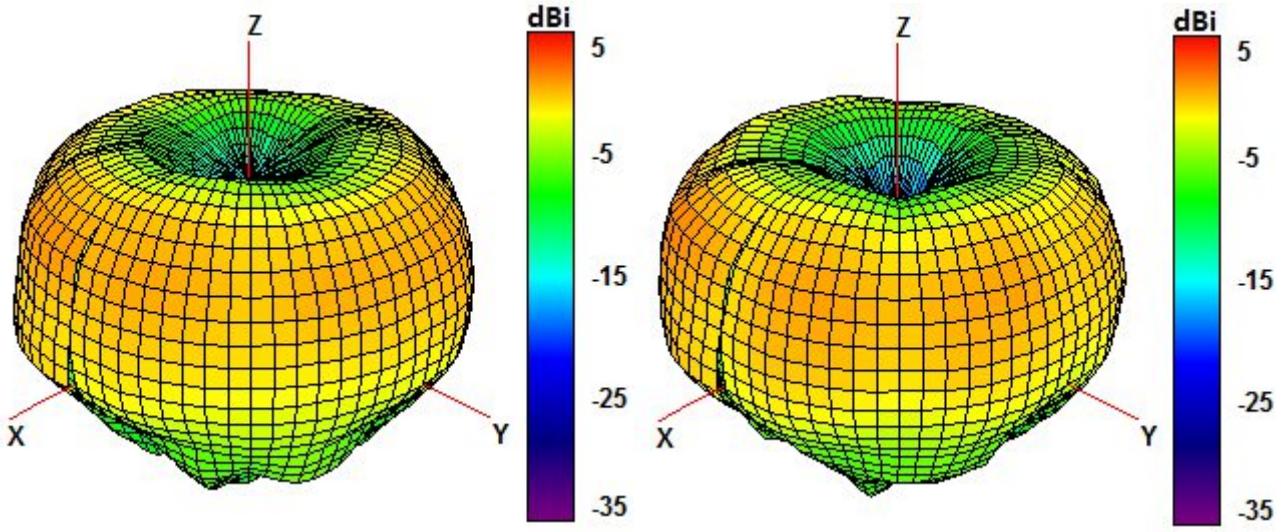

1850 and 1950 MHz Radiation pattern

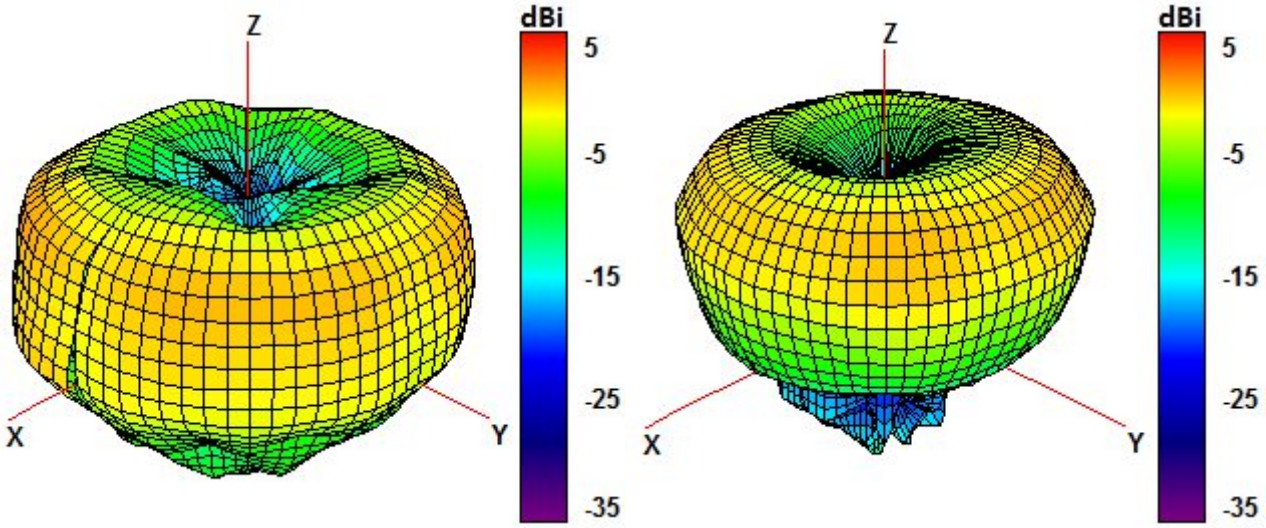

2100 and 2600 MHz Radiation pattern

4. Antenna drawings

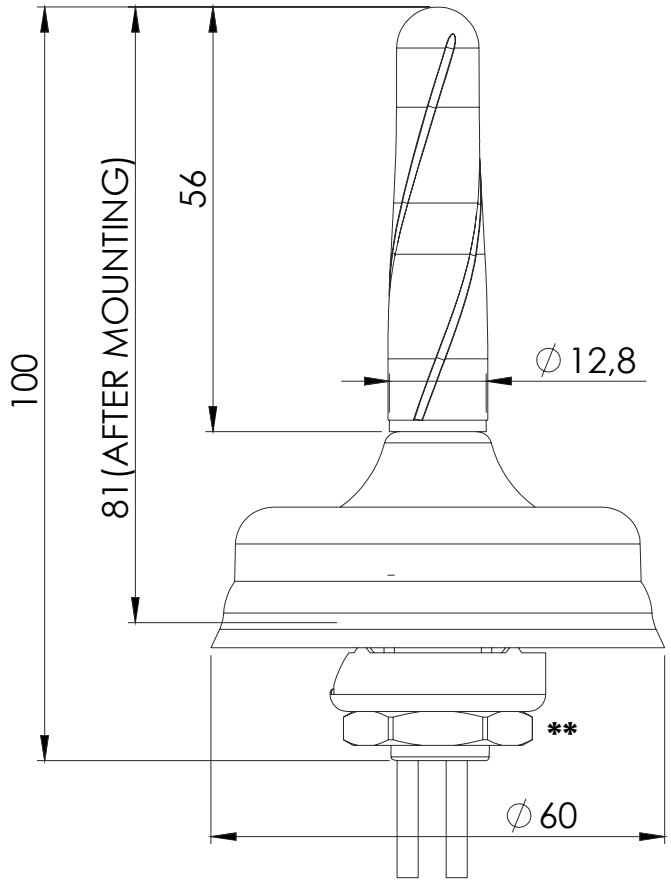

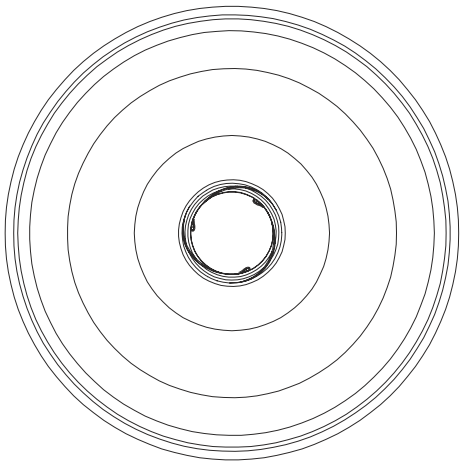

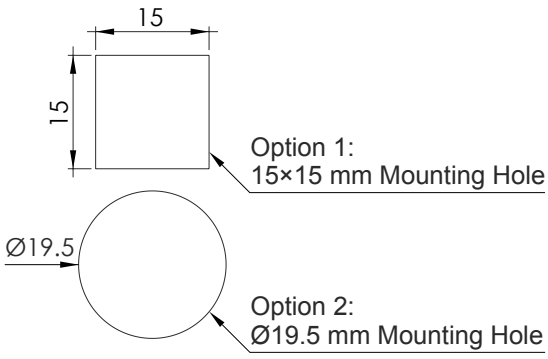

Note: Dimensions are in milimeters
***Dimensions are after mounting**
****Max. Torque= 6 Nm**

5. Antenna Images





