antenna conceptor

Product Datasheet

2J7401MGF

GPS/GLONASS Magnetic Mount

Key Features

GPS/GLONASS/QZSS/Galileo
- 1575-1606 MHz
Magnetic Mount
Pre-Filter
Ground Plane Independent
Customizable Cable and Connector
Dimensions ø 54 × 14.7 mm
Certificates: IP67, IP69K



1. Antenna and electrical specifications

Passive Parameters	GPS/GLONASS Antenna	
Standards	GPS/QZSS/Galileo	GLONASS
Bands (MHz)	1575	1602
Frequency (MHz)	1575.42	1598-1606
Return Loss (dB)	~-21.8dB	<=-15.7dB
VSWR	<=1.1:1dB	<=1.4:1dB
Efficiency (%)	~65	~68
Peak Gain (dBiC)	~3.6	~3.9
Average Gain (dB)	~1.8	~-1.6
Impendance (Ohm)	50	
Radiation Pattern	Hemispherical	

Active Parameters	GPS/GLONASS Antenna	
Standards	GPS/QZSS/Galileo	GLONASS
Bands (MHz)	1575	1602
Frequency (MHz)	1575.42	1598-1606
Impendance (Ohm)	50	
VSWR	<1.2:1	
Radiation Pattern	Hemispherical	
Polarization	RHCP	
SAW Filter	Pre-Filter	
Active Gain (dB)	26 @ 3V, 28 @ 5V	
Voltage (V)	2.7 - 5.5	
Current (mA)	15 - 25	
Power Consumtion (mW)	138 Max	
Connector Type	SMA-Male Standard (Other Connectors Available)	
Cable Length (m)	300cm Standard (Any Cable Length Available)	
Cable Type	LMR100 Standard (Other Cables Available)	

2. Mechanical and environmental specifications

Specifications	2J7401MGF
Mounting Type	Magnetic Mount
Dimensions (mm)	Ø 54 × 14.7
Randome Type	PC+ASA
Randome Color	Black
Operating Temperature (C)	-40 to +85
Storage Temperature (C)	-40 to +85
Certificates	IP67, IP69K
Substance Compliance	RoHS

3. Antenna parameters

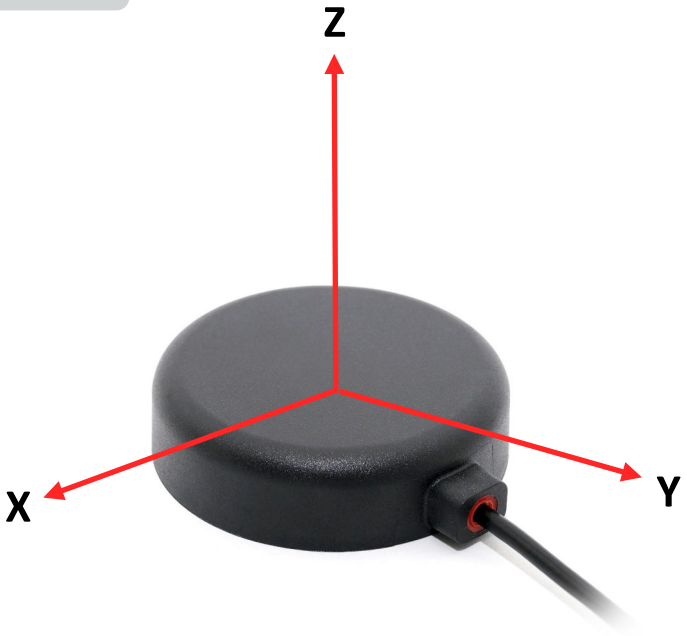

Radiation pattern reference

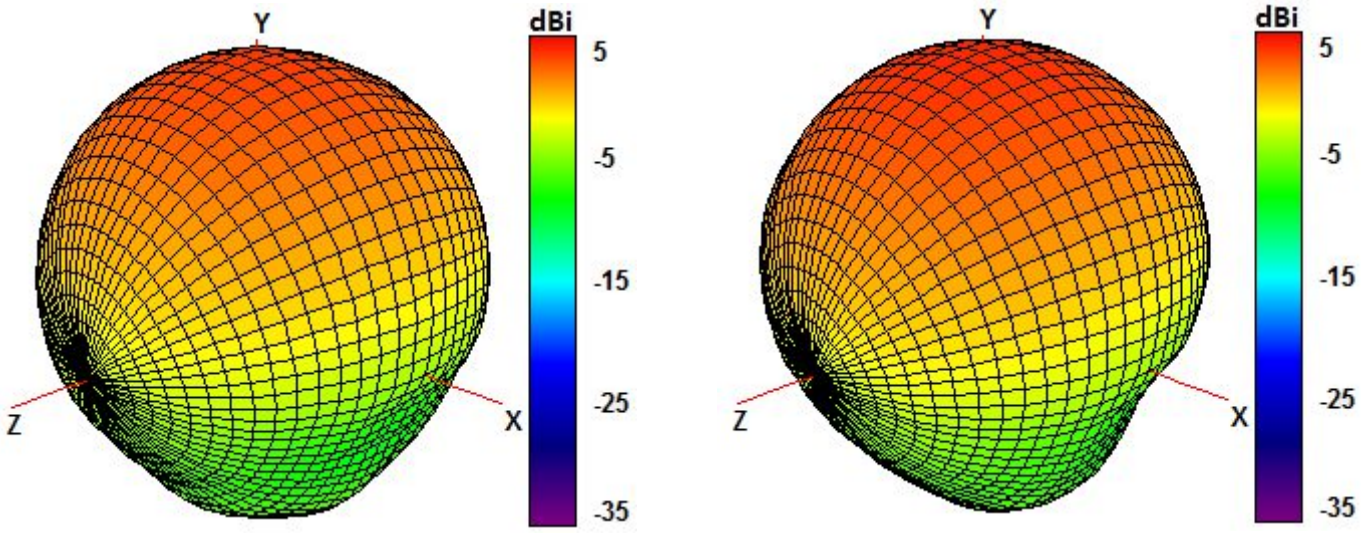

1575 MHz and 1602 MHz Radiation pattern

4. Antenna drawings

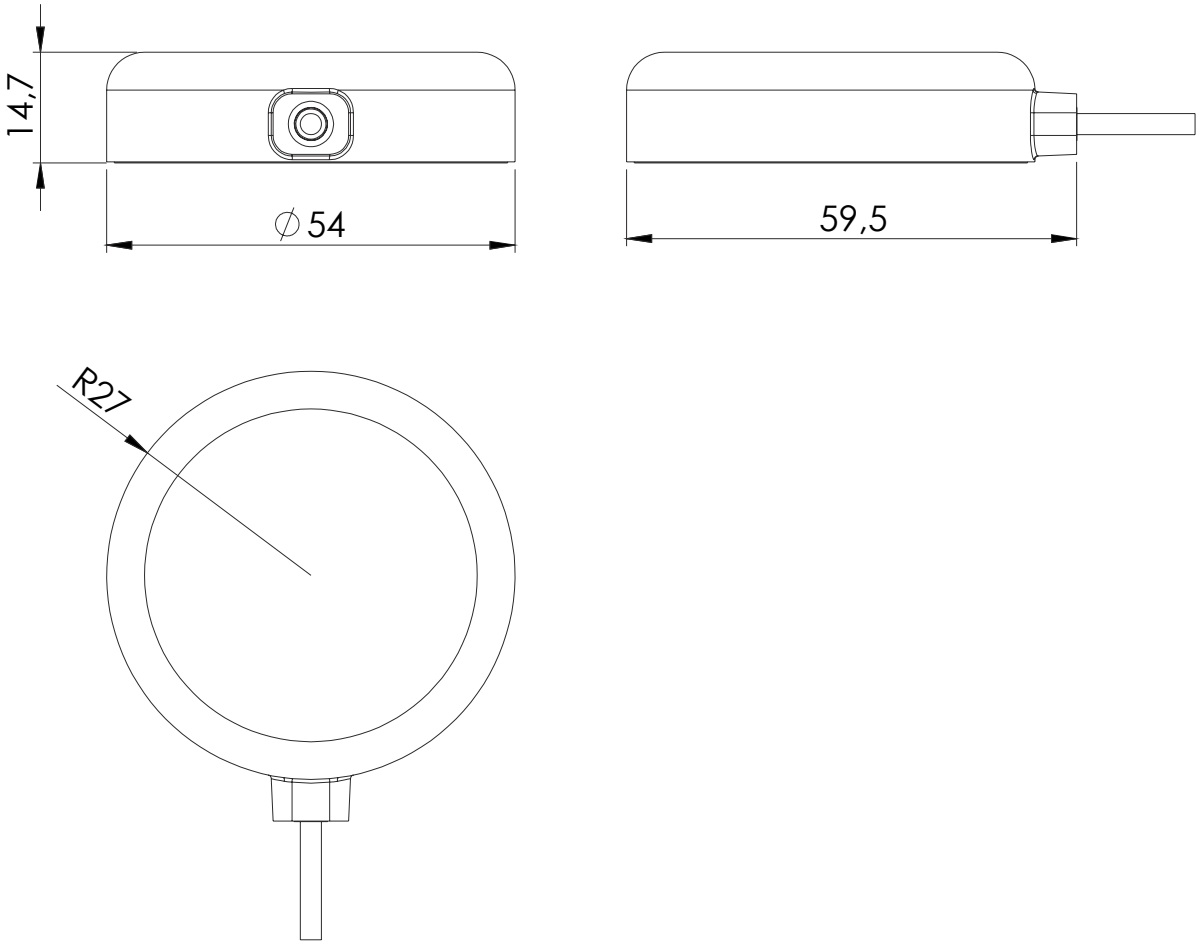

5. Antenna Images

