antenna conceptor

Product Datasheet

2J7239B-915

915 MHz ISM and GPS/GLONASS Screw Mount



Key Features

Cable 1: 915 MHz ISM
- 902-928 MHz

Cable 2: GPS/GLONASS
- 1575-1610 MHZ

Screw Mount
High Performance
Ground Plane Dependent
Customizable Cable and Connector
Dimensions ⌀ 60 x 97 mm

1. Antenna and electrical specifications

Cable 1

Parameters	915 MHz ISM Antenna
Standards	ZigBee, ISM, SIGFOX, LoRa
Band (MHz)	915 MHz
Frequency (MHz)	902-928
Return Loss (dB)	~-27.6
VSWR	~1.1:1
Efficiency (%)	~56
Peak Gain (dBi)	~1.9
Average Gain (dB)	~-2.5
Impendance (Ohm)	50
Polarisation	Linear
Radiation Pattern	Omni-Directional
Max. Input Power (W)	25
Connector Type	SMA-Male Standard

Cable 2

Parameters	GPS/GLONASS Antenna	
Standard	GPS / GLONASS	
Band (MHz)	1575	1602
Frequency(MHz)	1575.42	1598-1610
Return Loss (dB)	<-20	
VSWR	<1.2:1	
Impedance	50	
Radiation Pattern	Hemispherical	
Polarization	RHCP	
Saw Filter		
Active Gain (dB)	26 @ 3V / 27dB @ 5V	
Noise Figure (dB)	1.5	
Voltage (V)	2.7 – 5.5	
Current (mA)	15 - 25	
Power Consumption (mW)	40 - 137	
Connector Type	Most RF Connectors (SMA-Male Standard)	
Cable Length	Any Cable Length (200cm Standard)	
Cable Type	Other Cables Available (RG174 Standard)	

Antenna Measurement Conditions:

Mounted on 30x30xm Metal Plate

200 cm Cable Length RG174

Measured in Certified CTIA 3D Anechoic Chamber

2. Mechanical and environmental specifications

Specifications	2J7239B-915
Mounting Type	Screw Mount
Dimensions (mm)	Ø 60 × 97
Max. Tighten Torque (Nm)	6 Nm
Radome	ABS UV Stable
Radome color	Black
Antenna Base	Zamak
Gasket	TPE
Operating Temperature (C)	-40 to +85
Storage Temperature (C)	-40 to +85
Substance Compliance	RoHS
Certificates	IP67

3. Antenna parameters

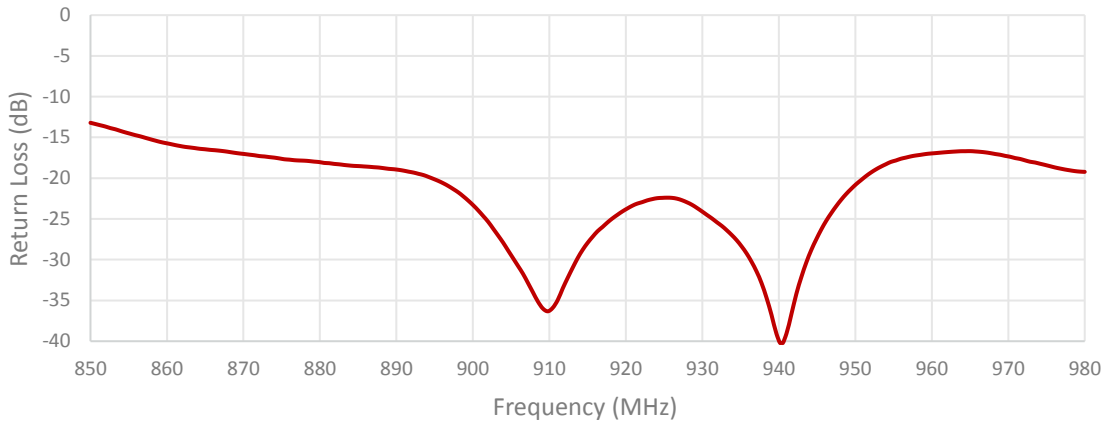

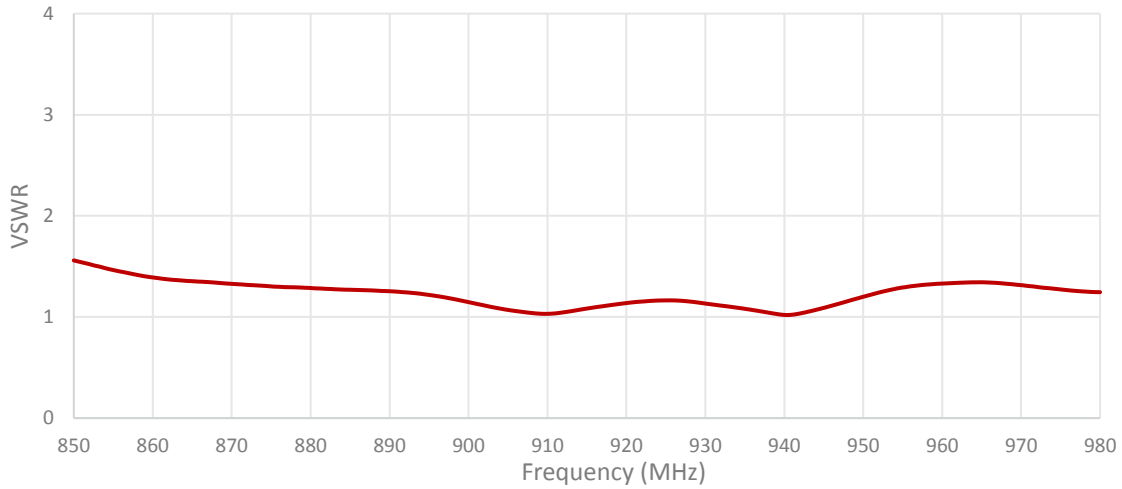

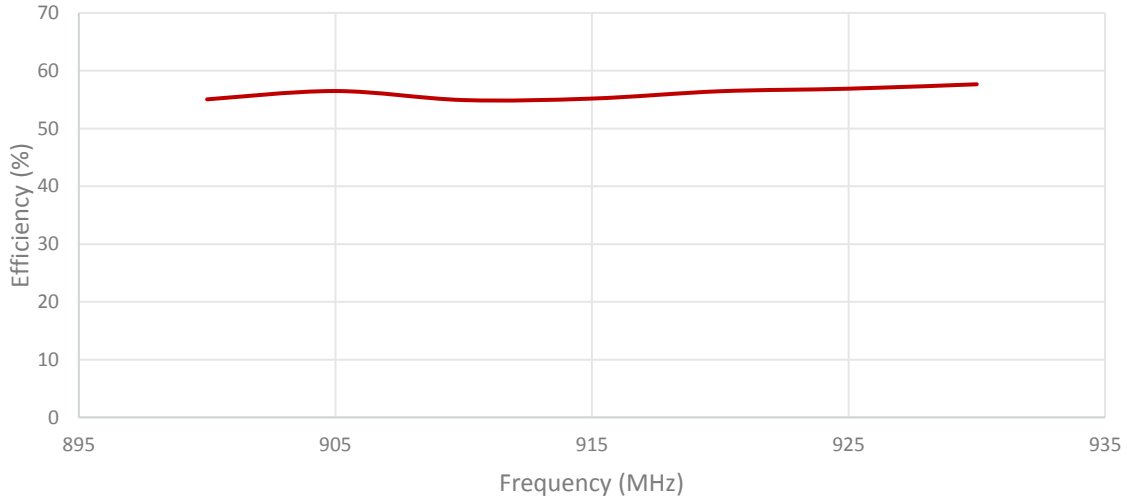
70
60
50
40
30
20
10
0
Efficiency (%)
895
905
915
925
935
Frequency (MHz)

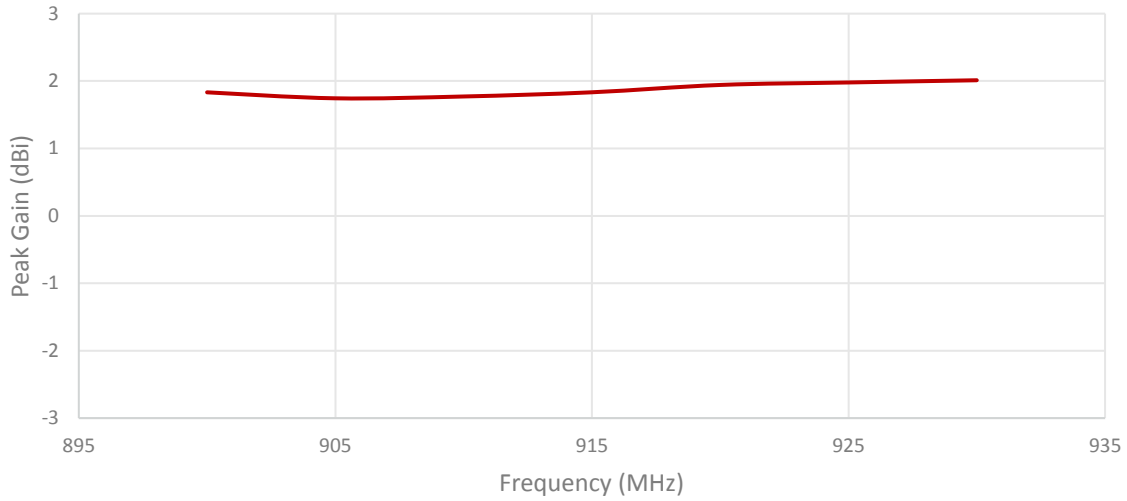
3
2
1
0
-1
-2
-3
Peak Gain (dBi)
895
905
915
925
935
Frequency (MHz)

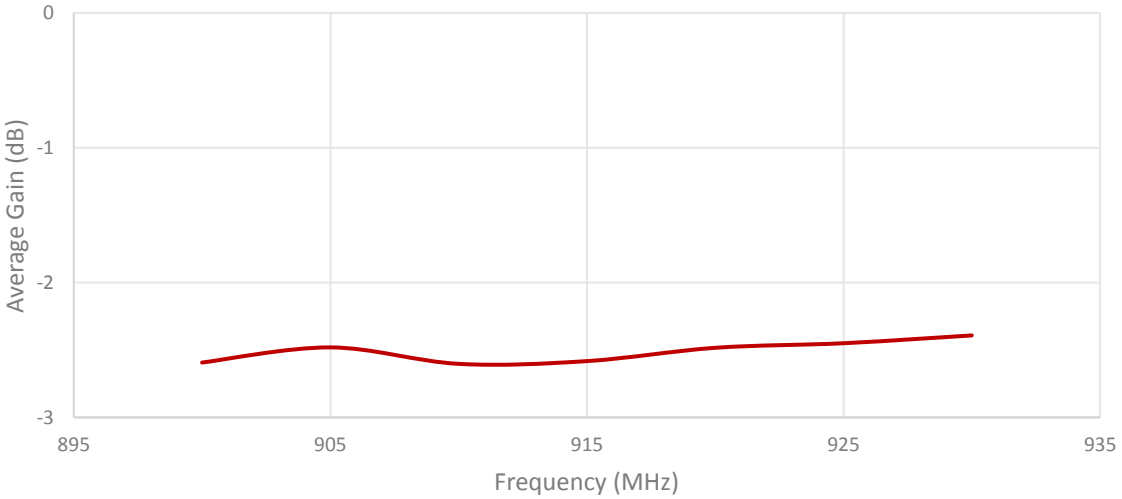

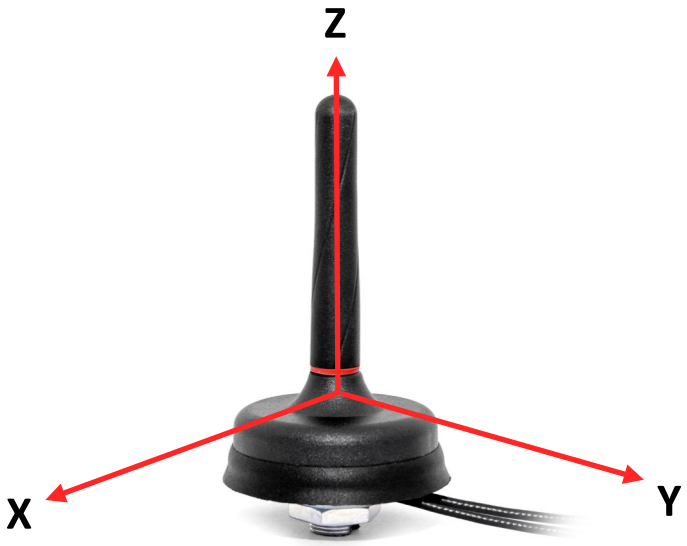

Radiation pattern reference

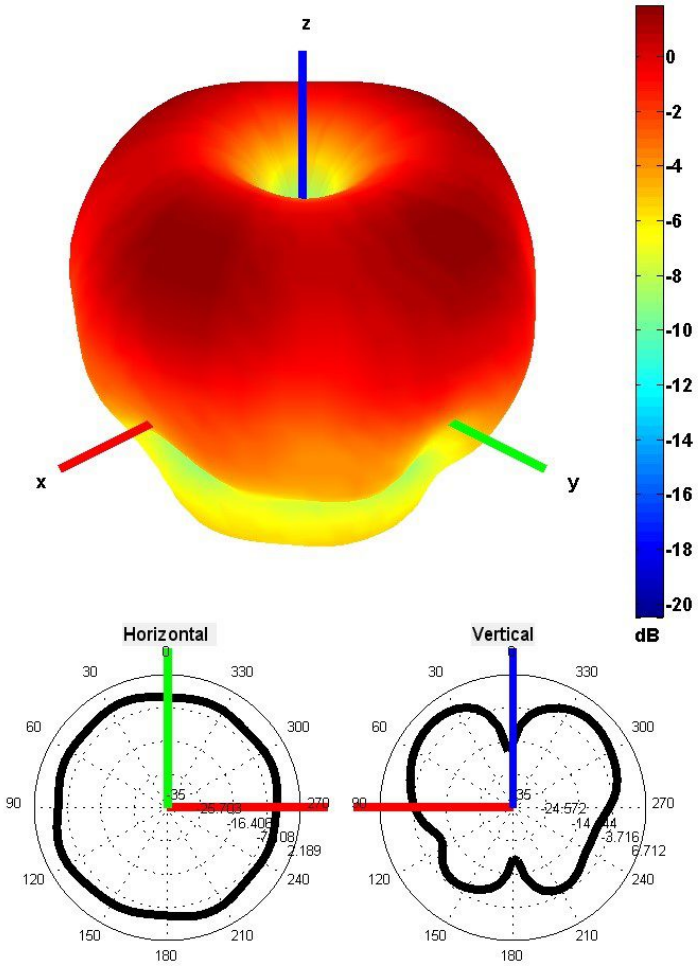

915 MHz Radiation pattern

4. Antenna drawings

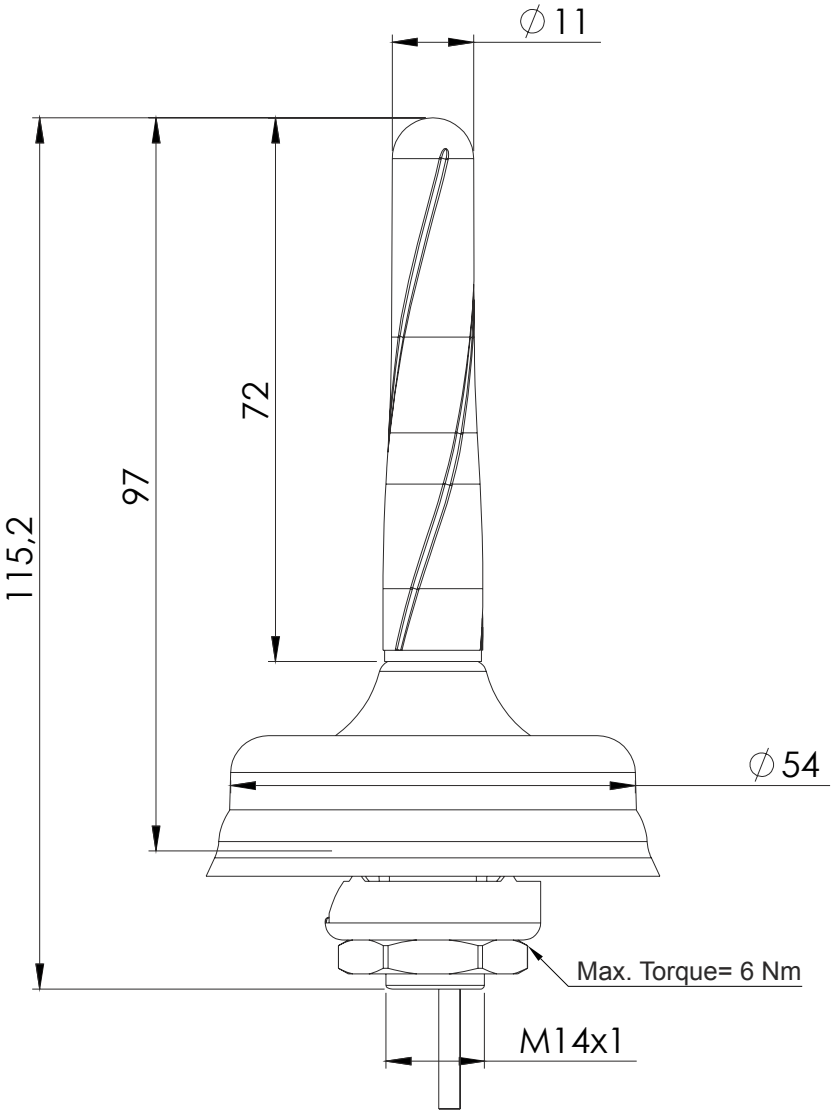

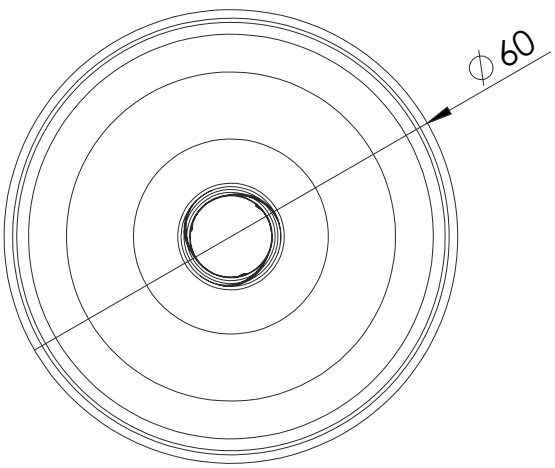

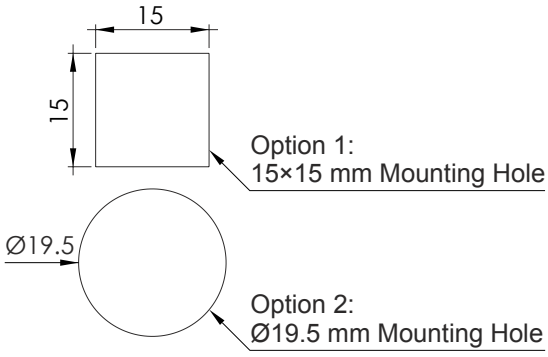

Note: Dimensions are in milimeters
***Dimensions are after mounting**
****Max. Torque= 6 Nm**

5. Antenna Images





